TFMOV

Thermally Protected Varistors

Features

- Thermal Protection, High Reliability
- Small Size
- Remote Signal Contact for Failure Indication
- High Energy Capacity
- Sealing Material, Flame-retardant to V0 (UL 94)
- Comply with UL 1449 / IEC 61643-11

Applications

- Telecom Equipment
- String Inverter in Photovoltaic System
- AC / DC Power Supply
- Uninterruptable Power Supply (UPS)
- Surge Protective Device (SPD)
- Electric Meter
- Power Distribution Unit (PDU)

All Rights Reserved by Xiamen SET Electronics Co., Ltd. 2021-2023 V3.0

TFMOV
Thermally Protected Varistors

SETsafe | SETfuse

Thermal Fuse & MOV (TFMOV) Feature & Model List Overview

Rated Voltage U_n (V) AC	Rated Voltage U_n (V) AC	Rated Voltage U_n (V) DC	5	10	20	20	Maximum Continuous Operating Voltage U_n (V) AC	Maximum Continuous Operating Voltage U_n (V) DC	Page
690V	600V		TFMOV05M750	○	TFMOV20M750	○	750	750	
			TFMOV05M680	TFMOV10M680	TFMOV20M680	TFMOV25M680TI	680	680	
480V			TFMOV05M625	TFMOV10M625	TFMOV20M625	TFMOV25M625TI	625	625	
			○	○	○	TFMOV25M575TI	575	575	
	400V		TFMOV05M550	TFMOV10M550	TFMOV20M550	TFMOV25M550TI	550	550	
			TFMOV05M510	TFMOV10M510	TFMOV20M510	TFMOV25M510TI	510	510	
347V			TFMOV05M460	TFMOV10M460	TFMOV20M460	○	460	460	
			○	○	○	TFMOV25M440TI	440	440	
	254 - 277V		TFMOV05M420	TFMOV10M420	TFMOV20M420	○	420	420	
220 - 230V			TFMOV05M385	TFMOV10M385	TFMOV20M385	TFMOV25M385TI	385	385	
			TFMOV05M350	TFMOV10M350	TFMOV20M350	○	350	350	
			TFMOV05M320	TFMOV10M320	TFMOV20M320	○	320	320	
		300V	TFMOV05M300	TFMOV10M300	TFMOV20M300	○	300	300	
			TFMOV05M275	TFMOV10M275	TFMOV20M275	○	275	275	
	120 - 130V		TFMOV05M250	TFMOV10M250	TFMOV20M250	○	250	250	
		220V	TFMOV05M230	TFMOV10M230	TFMOV20M230	○	230	230	
			TFMOV05M210	TFMOV10M210	TFMOV20M210	○	210	210	
			TFMOV05M190	TFMOV10M190	TFMOV20M190	○	190	190	
			TFMOV05M175	TFMOV10M175	TFMOV20M175	○	175	175	
		110V	TFMOV05M150	TFMOV10M150	TFMOV20M150	○	150	150	
110V			TFMOV05M140	TFMOV10M140	TFMOV20M140	○	140	140	
			TFMOV05M130	TFMOV10M130	TFMOV20M130	○	130	130	
			TFMOV05M115	TFMOV10M115	TFMOV20M115	○	115	115	
	60V	60V	TFMOV05M95	TFMOV10M95	TFMOV20M95	○	95	95	
48V			TFMOV05M75	TFMOV10M75	TFMOV20M75	○	75	75	
		48V	TFMOV05M60	TFMOV10M60	TFMOV20M60	○	60	60	
	36V		TFMOV05M50	TFMOV10M50	TFMOV20M50	○	50	50	
			○	○	○	○	40	40	
24V		24V	○	○	○	○	35	35	
			○	○	○	○	30	30	
12V		12V	○	○	○	○	25	25	

Nominal Discharge Current I_n (kA)

+86-592-571-5838 www.SETsafe.com www.SETfuse.com E-mail : sales@SETfuse.com

All Rights Reserved by Xiamen SET Electronics Co., Ltd. 2021-2023 V3.0

TFMOV

Thermally Protected Varistors

Description

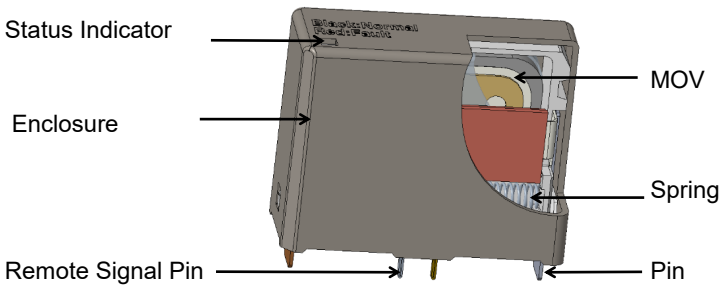

TFMOV(Remote Monitoring)
Mechanical trip

TFMOV is a combination of varistors (MOV) and thermal protection component. Since varistor has the characteristics of aging or degrading; TFMOV can separate the varistor from the main circuitry by opening the thermal protection component when the varistor (MOV) degrades or fails. It is often used in which requires high reliability and weather withstanding, such as photovoltaic inverters, communication equipment, and power supplies in data centers, etc.

Schematics

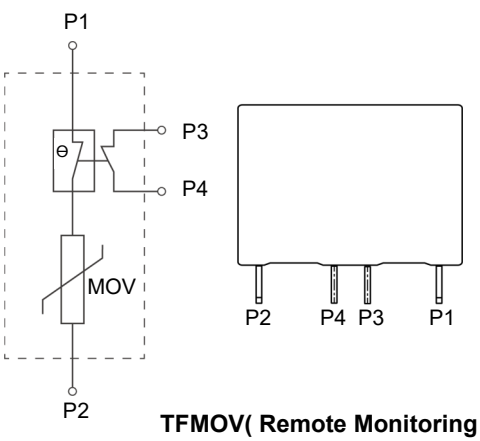

TFMOV(Remote Monitoring)
Mechanical trip

All Rights Reserved by Xiamen SET Electronics Co., Ltd. 2021-2023 V3.0

MOV Operation Principle

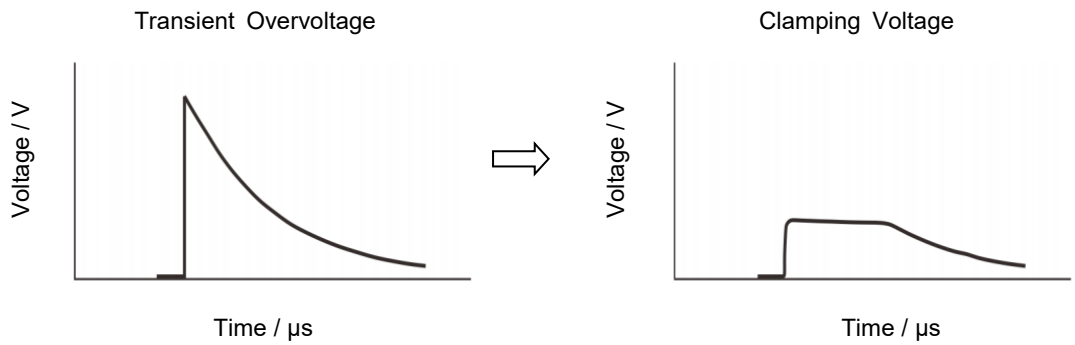

Thermal Protection MOV

Figure a is a surge protection circuit commonly used in power supplies. MOV is used to suppress the surge voltage and protect the subsequent circuit. There is a risk of burning when the varistor degrades or fails. In the high-reliability surge protection circuit of Figure b, in order to improve the safety of the circuit, a thermal protection varistor TFMOV is used as the surge voltage protection element. TFMOV is a combination of varistors (MOV) and thermal protection component. When the temperature of the MOV is abnormally exceeded, the thermal fuse will be opened first, so that the failure mode of the MOV appears to be open-circuit failure.

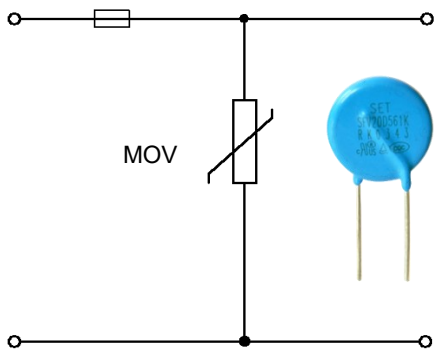

Figure a Typical surge protection circuit

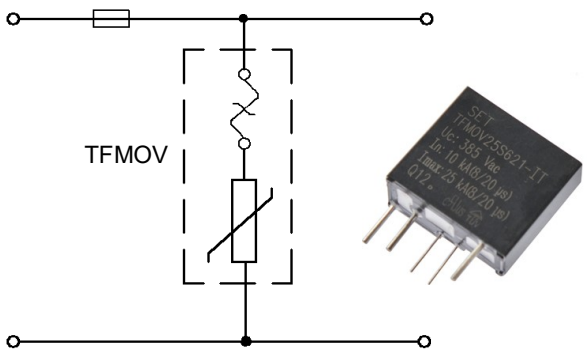

Figure b: High reliability surge protection circuit

All Rights Reserved by Xiamen SET Electronics Co., Ltd. 2021-2023 V3.0

Benefits

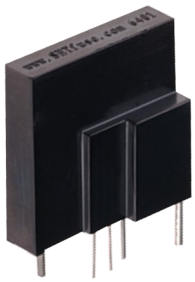

Safety

Hidden Danger

TFMOV

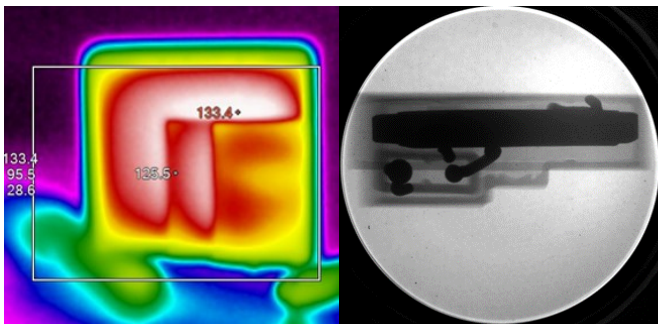

TFMOV Failure Simulation

During the electrical performance degrading of varistor, the inbuilt ATCO will open the circuit when the leakage current of varistor increases to tens of micro Amperes. As shown in the figure above, this is a safe open circuit failure.

MOV Failure Simulation

The electrical performance of varistor degrades with operating, mostly the varistor voltage drops, and leakage current increases. The heat accumulation can cause the temperature increase sharply and varistor results in thermal breakdown to short circuit status. It's very dangerous.

All Rights Reserved by Xiamen SET Electronics Co., Ltd. 2021-2023 V3.0

Part Numbering System

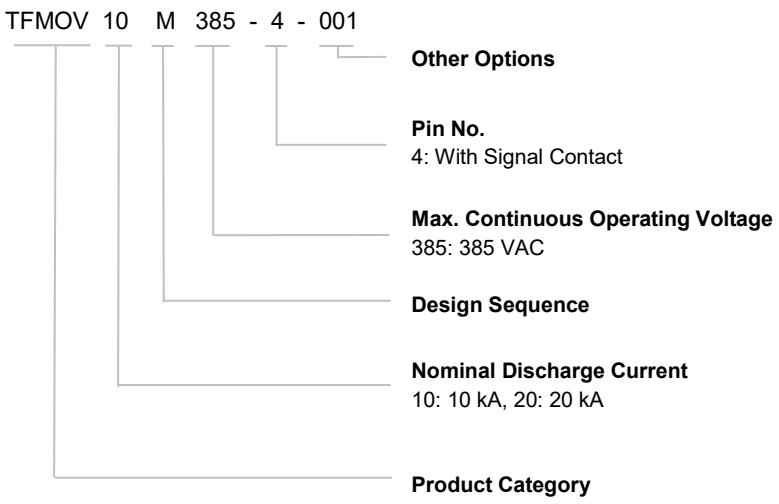

Note：
Pin number and other options are used only as identification codes for internal unique specifications and are not part of the product model

TFMOV

All Rights Reserved by Xiamen SET Electronics Co., Ltd. 2021-2023 V3.0

Nominal Discharge Current

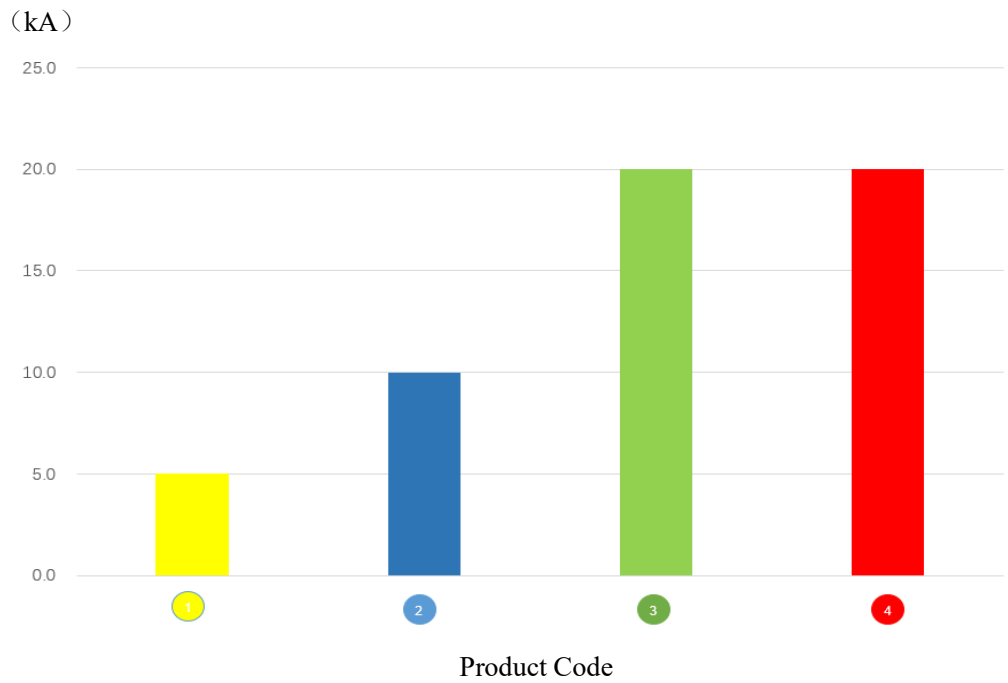

TFMOV05M Series 2 TFMOV10M Series 3 TFMOV20M Series 4 TFMOV25M Series

Application Options

Remote Radio Unit (AC Type)

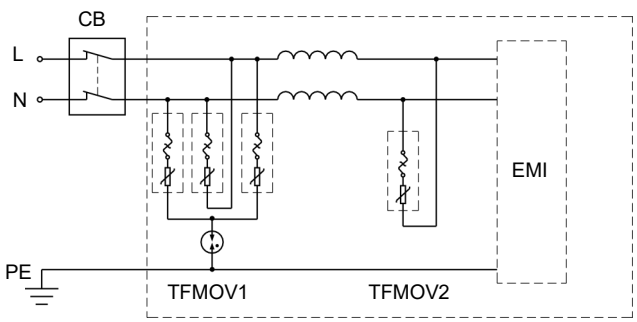

Power Strips (Surge Protector)

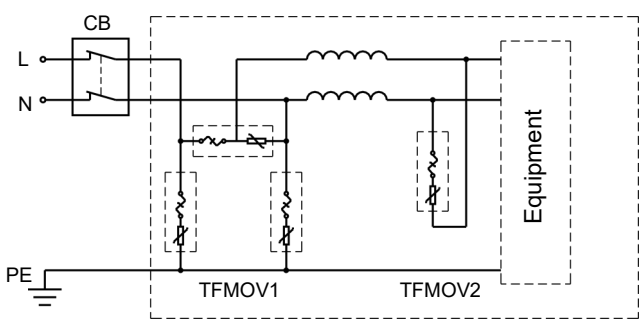

All Rights Reserved by Xiamen SET Electronics Co., Ltd. 2021-2023 V3.0

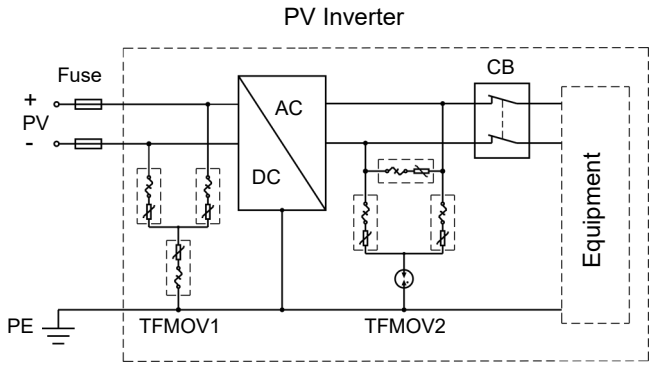

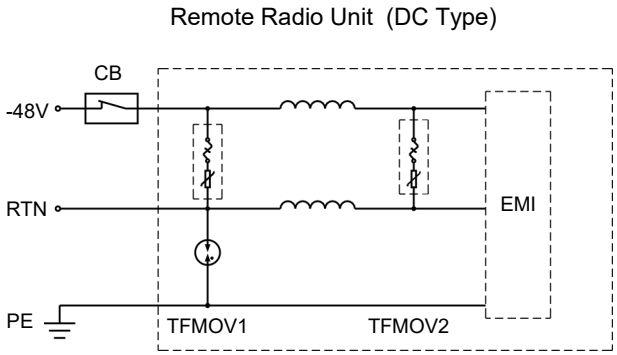

Design

When a single TFMOV surge capacity can`t meet the requirement of customers, paralleling more TFMOVs is recommended. Due to its nonlinear current-voltage characteristics, please pay attention to below tips:

1. Use the TFMOV from the same manufacturer with same model to parallel.
2. Control the varistor voltage; Typically, the varistor voltage deviation should be less than 1% in the same group (between the Max and Min), and meet the next tip at the same time.
3. Calculate the average surge capacity for each TFMOV and keep a margin at least 10%.
4. Design the layout like Figure.2. to make sure the surge capacity is divided averagely.

The Design not Recommended

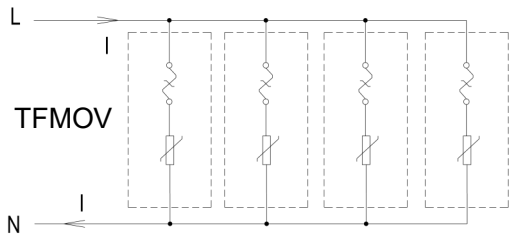

Figure .1

The Design Recommended

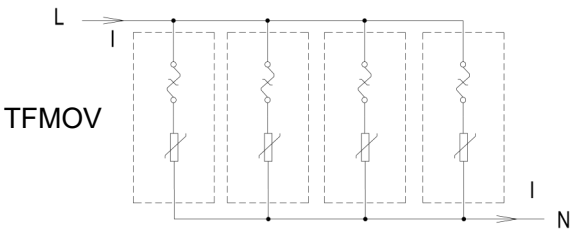

Figure .2

All Rights Reserved by Xiamen SET Electronics Co., Ltd. 2021-2023 V3.0

Agency Information

Agency Information		Standards	NO.	Category
	UL	UL 1449 4th Edition	E322662	VZCA2
	CUL	CSA C22. 2 NO. 269, CSA ECN 516	E322662	VZCA8
	TUV	IEC/EN 61643-11, IEC/EN 61643-31	See the different models for details	
	CQC	GB 4943.1-2011, GB 8898-2011; GB/T 10193-1997, GB/T 10194-1997	See the different models for details	
	CE	IEC/EN 61643-11, IEC/EN 61643-31	See the different models for details	

Patents

Name	Region	Category	Patent NO.
Varistor with In-built Alloy-Type Thermal Fuse	China	Patent for Invention	ZL 200510044661.5
A Protection Pluggable Module with Over Current、Over Voltage、and Over Temperature Protection Function	China	Utility Model	ZL 201020244488.X
A Varistor with Double Protection Function	China	Utility Model	ZL 201020255481.8
Surge Protection Module Applicable for Power Strip	China	Utility Model	ZL 201120107173.5
A Surge Protection Module Applicable for Power Strip	China	Patent for Invention	ZL 201110092261.7
A New Type of Varistor and Surge Protective Device with Thermal Protection	China	Utility Mode	ZL 201420306127.1
A Surge Protective Device	China	Utility Modeel	ZL 201420415059.2
A Varistor and Thermal Protection Component Combination	China	Utility Mode	ZL 201520376567.9
合金型温度ヒューズ付のバリスタ	Japan	Utility Mode	3142835
Varistor with an Alloy-Type Temperature Fuse	Australia	Utility Mode	2007100456
Varistor with an Alloy-Type Temperature Fuse	Taiwan	Utility Model	M 300855
Varistor with an Alloy-type Temperature Fuse	Canada	Patent for Invention	2588819
Metal Oxide Varistor with Built-in Alloy-Type Temperature Fuse	USA	Patent for Invention	US 8780521
Varistor with In-built Alloy Type Thermal Fuse (with Housing)	USA	Patent for Invention	US 9355763

TFMOV

All Rights Reserved by Xiamen SET Electronics Co., Ltd. 2021-2023 V3.0

Glossary

Item	Description
V_N	**Nominal Varistor Voltage** Voltage, at specified d.c. current used as a reference point in the component characteristic.
8/20 μs	**8/20 Current Impulse** Current impulse with a nominal virtual front time of 8 μs and a nominal time to half-value of 20 μs. — (IEC 61643-11)
1.2/50 μs	**1.2/50 Voltage Impulse** Voltage impulse with a nominal virtual front time of 1.2 μs and a nominal time to half-value of 50 μs. — (IEC 61643-11)
U_c	**Maximum Continuous Operating Voltage** Maximum r.m.s. voltage, which may be continuously applied to the SPD's mode of protection. — (IEC 61643-11)
I_n	**Nominal Discharge Current** Crest value of the current through the SPD having a current waveshape of 8/20. — (IEC 61643-11)
I_{imp}	**Impulse Discharge Current for Class I Test** Crest value of a discharge current through the SPD with specified charge transfer Q and specified energy W/R in the specified time. — (IEC 61643-11)
I_{max}	**Maximum Discharge Current** Crest value of a current through the SPD having an 8/20 waveshape and magnitude according to the manufacturers specification. I_{max} is equal to or greater than I_n. — (IEC 61643-11)
V_C	**Clamping Voltage** Peak voltage developed across the varistor terminations under standard atmospheric conditions, when passing an 8/20 μs class current pulse.
C_V	**Capacitance** Capacitance across the MOV measured at a specified frequency and voltage.
Modes of protection	**Mode of protection of an SPD** An intended current path, between terminals that contains protective components, e.g. line-to-line, line-to-earth, line-to-neutral, neutral-to-earth. — (IEC 61643-11)
U_p	**Voltage Protection Level** Maximum voltage to be expected at the SPD terminals due to an impulse stress with defined voltage steepness and an impulse stress with a discharge current with given amplitude and waveshape. — (IEC 61643-11)
IP	**Degree of protection of enclosure** Classification preceded by the symbol IP indicating the extent of protection provided by an enclosure against access to hazardous parts, against ingress of solid foreign objects and possibly harmful ingress of water — (IEC 61643-11)

TFMOV

All Rights Reserved by Xiamen SET Electronics Co., Ltd. 2021-2023 V3.0

ATTENTION

Usage

1. The voltage applied continuously to the TFMOV can not exceed its maximum continuous operating voltage U_c.
2. When atmosphere press is from 45 kPa to 106 kPa, the related altitude shall be from 5000 meters to - 500 meters.
3. Do not touch the product body or pins directly when power is on, to avoid electric shock.
4. Do not clean the TFMOV with strong polar solvent such as ketone, esters, benzene, halogenated hydrocarbon, to avoid damaging the enclosure.
6. It should have a reliable grounding when using these products.

Replacement

TFMOV is a non-repairable product. For safety sake, please use equivalent TFMOV for replacement.

Storage

Do not store TFMOV at high temperature, high humidity or corrosive gas environment. To avoid reducing the solderability of the pins, please use them up within 1 year after receiving the goods.

Installation Position

Do not install the TFMOV on a place that may often suffer severe continuous vibration.

Mechanical Stress

Do not take violent action such as knocking when assembling to avoid mechanical damage.

All Rights Reserved by Xiamen SET Electronics Co., Ltd. 2021-2023 V3.0

Wave Soldering Parameters (Reference)

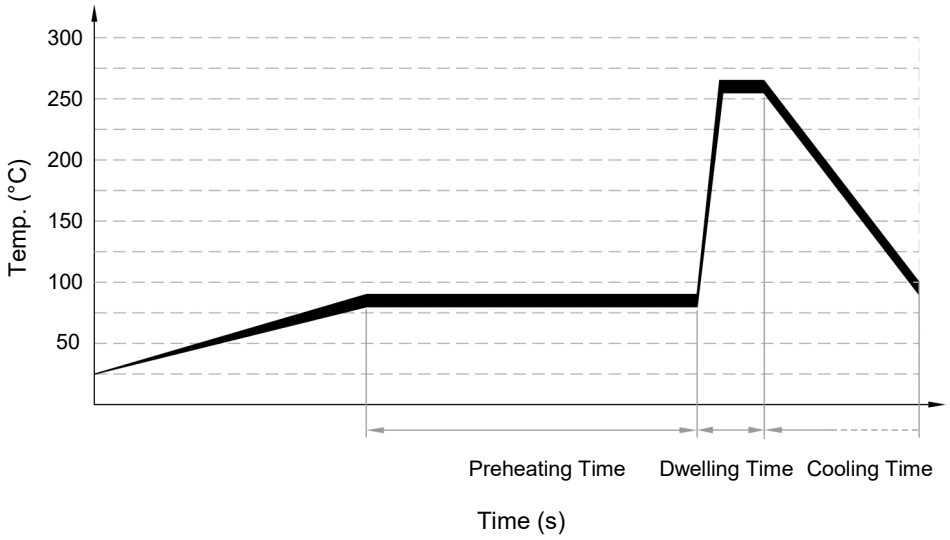

Item	Temp. (°C)	Time (s)
Preheating	80 to 90	60 to 150
Dwelling	250 to 260	2 to 4

Recommended Hand-Soldering Parameters

Item	Condition
Iron Temperature	350 °C (Max.)
Soldering Time	4 seconds (Max.)
Distance between Soldering Point and the Bottom of Product	2 mm (Min.)

TFMOV

All Rights Reserved by Xiamen SET Electronics Co., Ltd. 2021-2023 V3.0

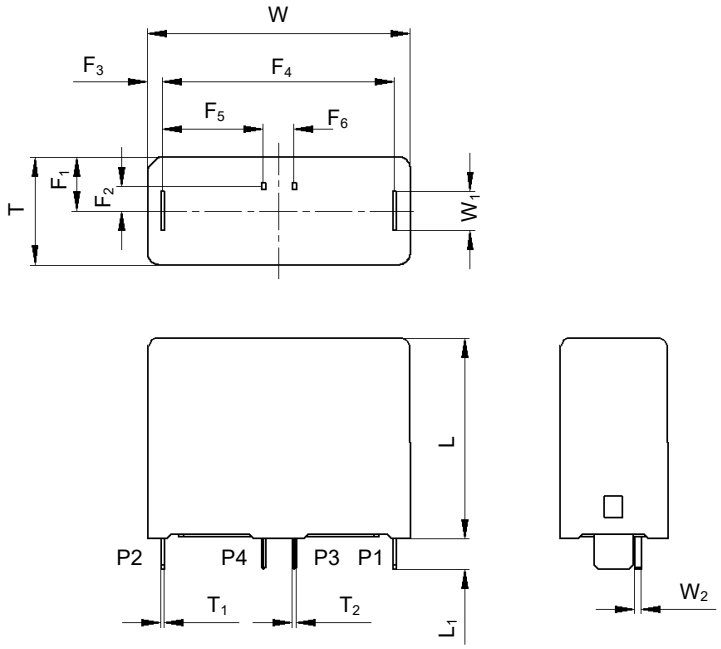

Note: Unit: mm
TFMOV10M625, TFMOV10M680: Thickness T is 16.0±1.0 mm

L	L_1	W	W_1	W_2	T	T_1
26.5±1.0	3.5±0.5	34.0±1.0	5.0±0.5	1.0±0.3	14.0±1.0	0.4±0.2
T_2	F_1	F_2	F_3	F_4	F_5	F_6
0.5±0.2	7.0±0.5	3.3±0.5	2.0±0.5	30.0±0.5	13.0±0.5	4.0±0.5

Agency Approvals

Agency	Standards	No.
c UL us	UL1449	E322662
TÜVRheinland	EN 61643-11 EN 50539-11	J 50437564 R 50438698
CE	EN 61643-11 EN 61643-31	AN50473984 AN50473676
Environment	RoHS 2.0 & REACH	Compliant

Schematics

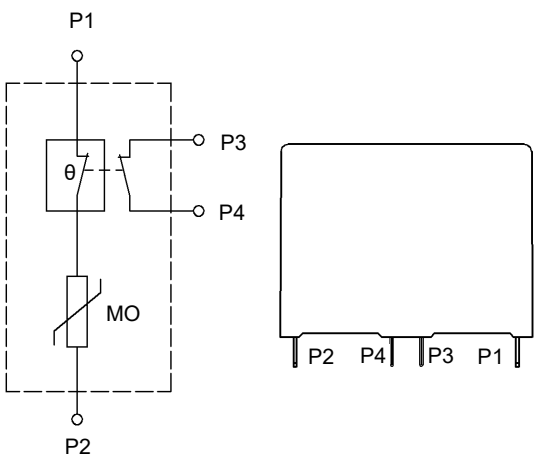

All Rights Reserved by Xiamen SET Electronics Co., Ltd. 2021-2023 V3.0

Specifications

Model	Nominal System Voltage	Nominal Varistor Voltage @1mA	Max. Continuous Operating Voltage		Nominal Discharge Current (8/20 μs)	Max. Discharge Current(8/20 μs)	Voltage Protection Level	SCCR	UL1449			IEC/ EN 61643-11	IEC/ EN 61643-31
	U_n	V_N	MCOV		I_n	I_{max}	U_p						
	(VAC)	(V)	U_c (VAC)	U_{cpv} (VDC)	(kA)	(kA)	(V)	(kA)	AC Type 1CA	AC Type 4CA	DC Type 4CA	Class II	Class II
TFMOV10M50	24	82	50	-	10	25	360	-		●		●	
TFMOV10M60	48	100	60	-	10	25	400	-		●		●	
TFMOV10M75	60	120	75	-	10	25	400	-		●		●	
TFMOV10M95	60	150	95	-	10	25	450	-		●		●	
TFMOV10M115	108	180	115	-	10	25	500	-		●		●	
TFMOV10M130	120	200	130	-	10	25	550	-		●		●	
TFMOV10M140	120	220	140	-	10	25	600	-		●		●	
TFMOV10M150	120	240	150	-	10	25	600	-		●		●	
TFMOV10M175	120	270	175	-	10	25	700	200	●	●		●	
TFMOV10M190	120	300	190	-	10	25	750	-		●		●	
TFMOV10M210	120	330	210	-	10	25	800	-		●		●	
TFMOV10M230	120	360	230	-	10	25	900	-		●		●	
TFMOV10M250	220	390	250	-	10	25	1000	-		●		●	
TFMOV10M275	230	430	275	-	10	25	1100	-		●		●	
TFMOV10M300	230	470	300	-	10	25	1200	200	●	●		●	
TFMOV10M320	277	510	320	-	10	25	1300	-		●		●	
TFMOV10M350	277	560	350	-	10	25	1500	200	●	●		●	
TFMOV10M385	277	620	385	500	10	25	1500	-		●	●	●	●
TFMOV10M420	347	680	420	560	10	25	1800	150	●	●	●	●	●
TFMOV10M460	347	750	460	600	10	25	1800	-		●	●	●	●
TFMOV10M510	347	820	510	670	10	25	1800	-		●	●	●	●
TFMOV10M550	480	910	550	720	10	25	2500	150	●	●	●	●	●
TFMOV10M625	480	1000	625	800	10	25	2500	-		●	●	●	●
TFMOV10M680	480	1100	680	880	10	25	2500	-		●	●	●	●

Note:
The Value of Voltage Protection Level (U_p) is determined according to IEC 61643-11:2011 clause 6.4.
Preferred values of voltage protection level (kV): 0.08, 0.09, 0.10, 0.12, 0.15, 0.22, 0.33, 0.4, 0.5, 0.6, 0.7, 0.8, 0.9, 1.0, 1.2, 1.5, 1.8, 2.0, 2.5, 3.0, 4.0, 5.0, 6.0, 8.0, 10.

All Rights Reserved by Xiamen SET Electronics Co., Ltd. 2021-2023 V3.0

Performance Curve for Reference

Limited Current Test Curve (UL 1449 4th clause 44.4)

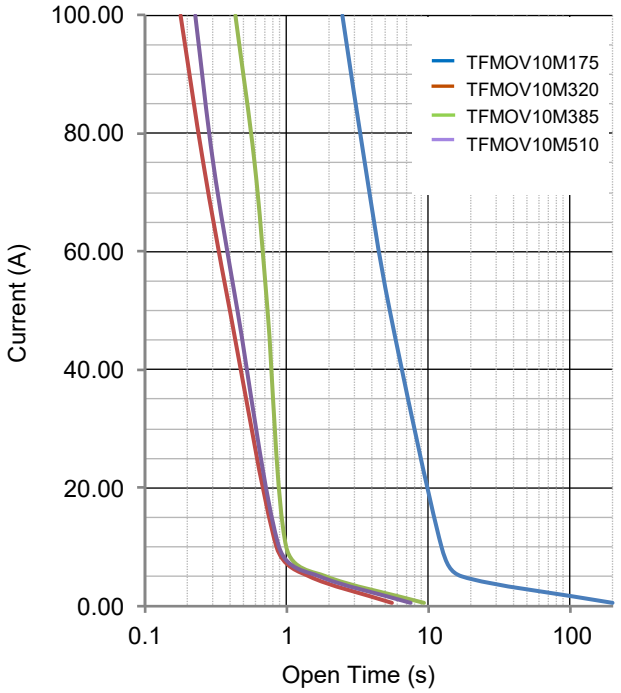

Note:
The limited current test curve is for reference only.

Max. Peak Current Derating Curve

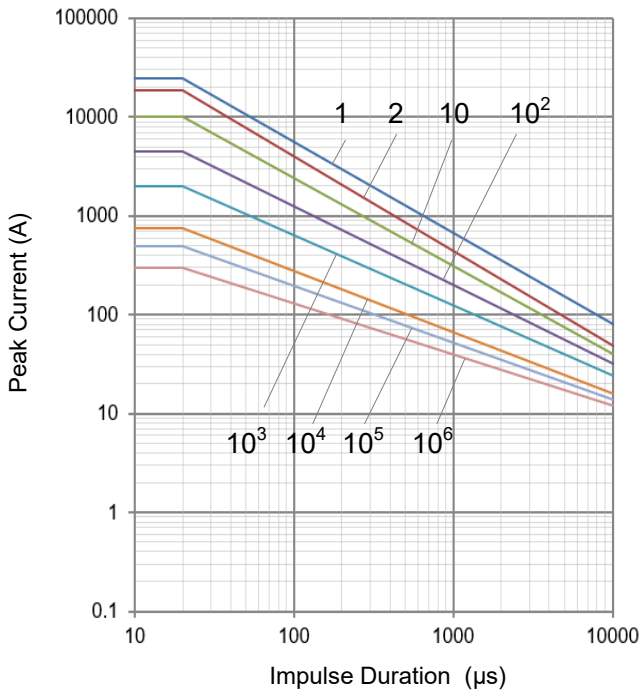

Note:
1, 2, 10, 10^2, 10^3, 10^4, 10^5, 10^6 Stand for number of repetitions.

Voltage-Current Characteristic Curves

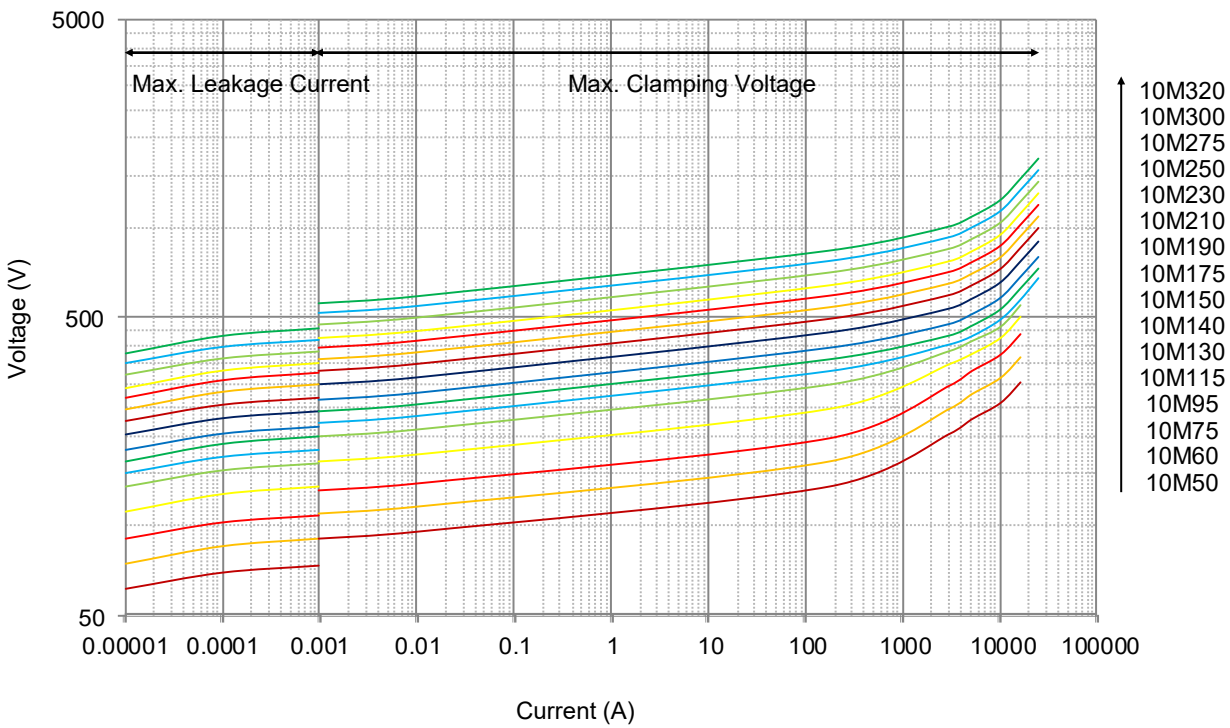

All Rights Reserved by Xiamen SET Electronics Co., Ltd. 2021-2023 V3.0

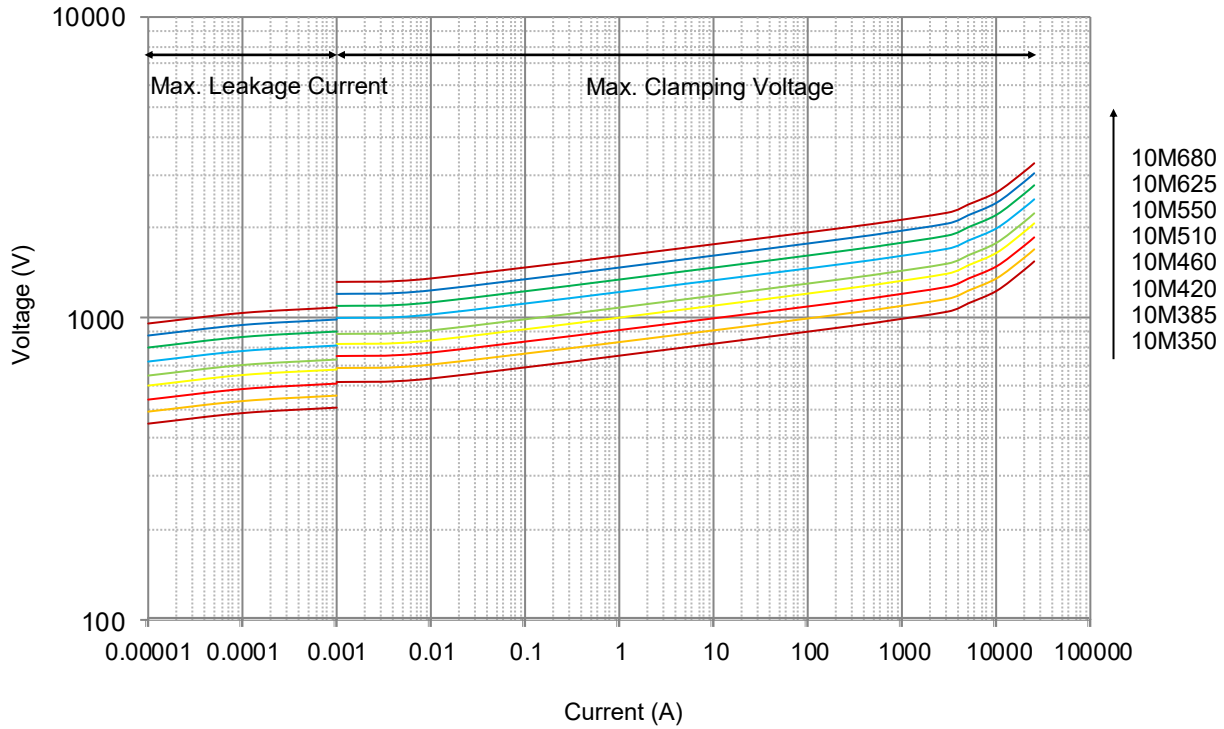

Packaging Information

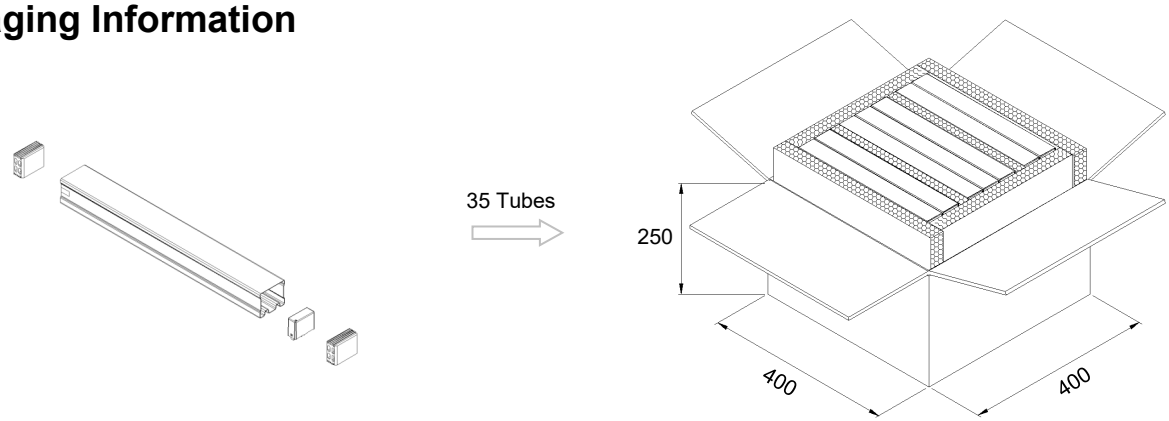

Unit: mm

Please contact us if you have special packaging requirements.

Item	Tube	Carton
Dimensions (mm)	40 × 34 × 314	400 × 400 × 250
Quantity (PCS)	20	700

All Rights Reserved by Xiamen SET Electronics Co., Ltd. 2021-2023 V3.0

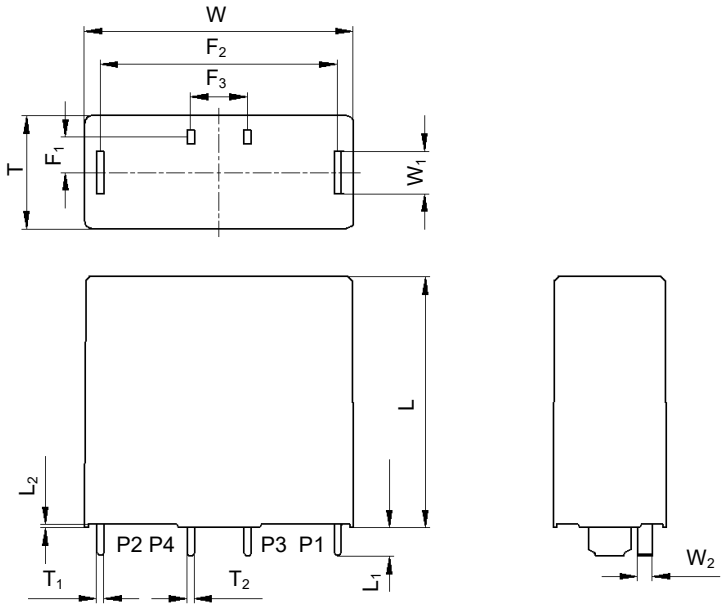

Note: Unit: mm

L	L_1	L_2	W	W_1	W_2
35.5±1.0	4.0±0.5	0.5±0.3	38.0±1.0	6.0±0.5	2.0±0.3
T	**T_1**	**T_2**	**F_1**	**F_2**	**F_3**
16.0±1.0	1.0±0.2	1.0±0.2	5.0±0.5	33.5±0.5	8.0±0.5

Agency Approvals

Agency	Standards	No.
c UL us	UL1449	E322662
TÜVRheinland	EN 61643-11 EN 61643-31	J 50493459 J 50497919
CE	EN 61643-11 EN 61643-31	AN 50494943 AN 50497842
Environment	RoHS 2.0 & REACH	Compliant

Schematics

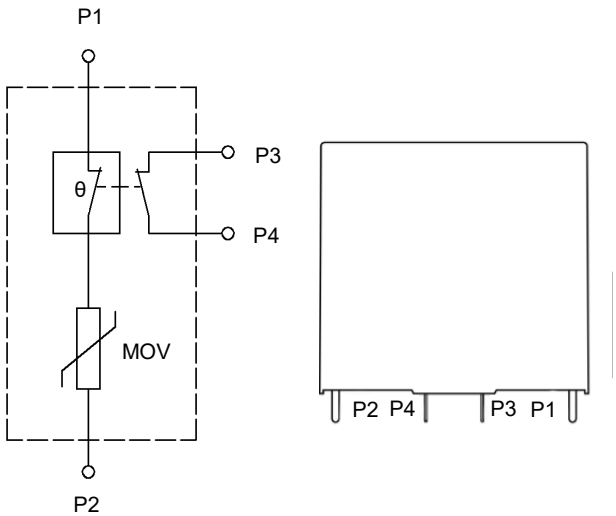

All Rights Reserved by Xiamen SET Electronics Co., Ltd. 2021-2023 V3.0

Specifications

Model	Nominal System Voltage	Nominal Varistor Voltage @1mA	Max. Continuous Operating Voltage		Nominal Discharge Current (8/20 μs)	Max. Discharge Current (8/20 μs)	Voltage Protection Level	SCCR	UL1449		EN 61643-11	EN 61643-31
	U_n	V_N	MCOV		I_n	I_{max}	U_p					
	(VAC)	(V)	U_c (VAC)	U_{cpv} (VDC)	(kA)	(kA)	(V)	(kA)	AC Type 1CA	DC Type 4CA	Class II	Class II
TFMOV20M50	24	82	50	-	20	40	400	-			●	
TFMOV20M60	48	100	60	-	20	40	450	-			●	
TFMOV20M75	60	120	75	-	20	40	450	-			●	
TFMOV20M95	60	150	95	-	20	40	500	-			●	
TFMOV20M115	108	180	115	-	20	40	500	-			●	
TFMOV20M130	120	200	130	-	20	40	600	-			●	
TFMOV20M140	120	220	140	-	20	40	600	-			●	
TFMOV20M150	120	240	150	-	20	40	700	-			●	
TFMOV20M175	120	270	175	-	20	40	700	200	●		●	
TFMOV20M190	120	300	190	-	20	40	750	-			●	
TFMOV20M210	120	330	210	-	20	40	800	-			●	
TFMOV20M230	120	360	230	-	20	40	900	-			●	
TFMOV20M250	220	390	250	-	20	40	1000	-			●	
TFMOV20M275	230	430	275	-	20	40	1100	-			●	
TFMOV20M300	230	470	300	-	20	40	1200	200	●		●	
TFMOV20M320	277	510	320	-	20	40	1300	-			●	
TFMOV20M350	277	560	350	-	20	40	1500	200	●		●	
TFMOV20M385	277	620	385	500	20	40	1800	-		●	●	●
TFMOV20M420	347	680	420	560	20	40	1800	200	●	●	●	●
TFMOV20M460	347	750	460	600	20	40	2000	-		●	●	●
TFMOV20M510	347	820	510	670	20	40	2000	-		●	●	●
TFMOV20M550	480	910	550	720	20	40	2500	200	●	●	●	●
TFMOV20M625	480	1000	625	800	20	40	2500	-		●	●	●
TFMOV20M680	480	1100	680	900	20	40	2800	-		●	●	●
TFMOV20M750	480	1200	750	1000	20	40	3300	-		●	●	●

Notes:

The Value of Voltage Protection Level (U_p) is determined according to IEC 61643-11:2011 clause 6.4.

Preferred values of voltage protection level (kV): 0.08, 0.09, 0.10, 0.12, 0.15, 0.22, 0.33, 0.4, 0.5, 0.6, 0.7, 0.8, 0.9, 1.0, 1.2, 1.5, 1.8, 2.0, 2.5, 3.0, 4.0, 5.0, 6.0, 8.0, 10.

All Rights Reserved by Xiamen SET Electronics Co., Ltd. 2021-2023 V3.0

Performance Curve for Reference

Limited Current Test Curve (UL 1449 4th clause 44.4)

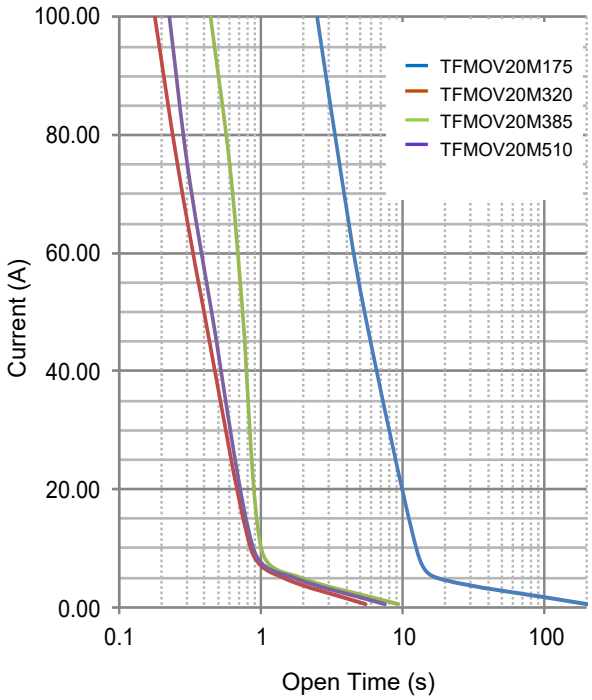

Note:
The limited current test curve is for reference only.

Max. Peak Current Derating Curve

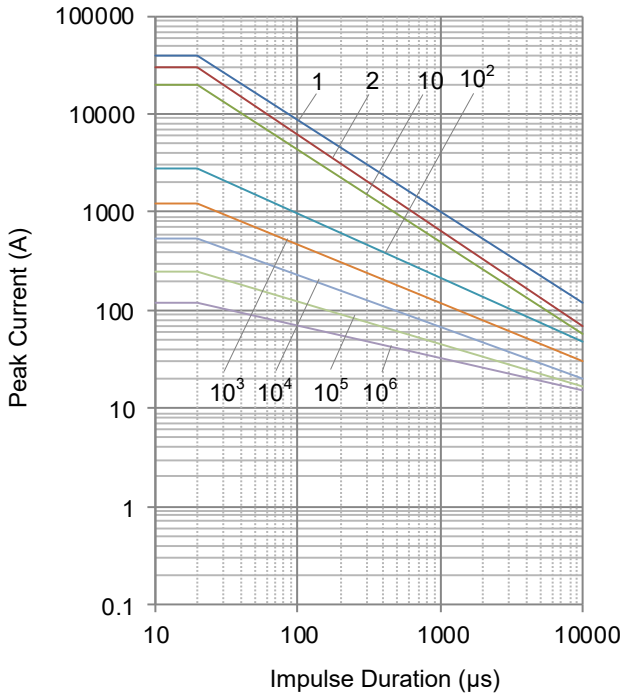

Note:
1, 2, 10, 10^2, 10^3, 10^4, 10^5, 10^6 Stand for number of repetitions.

Voltage-Current Characteristic Curves

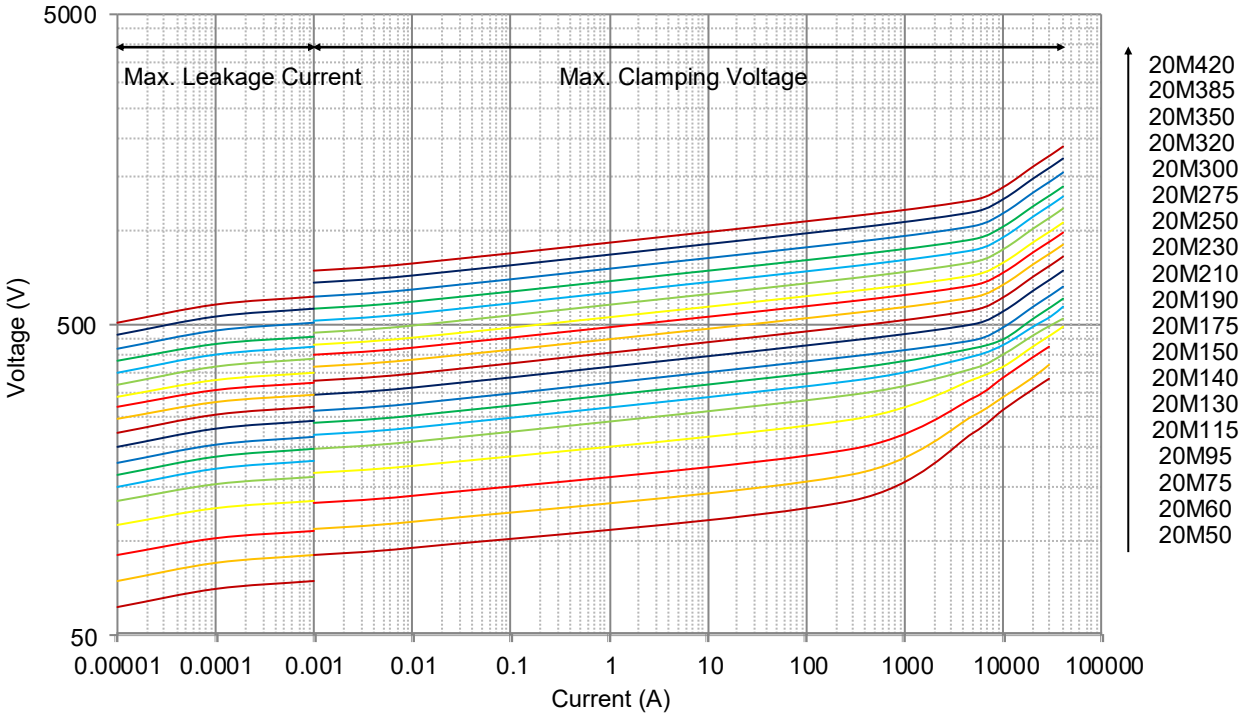

All Rights Reserved by Xiamen SET Electronics Co., Ltd. 2021-2023 V3.0

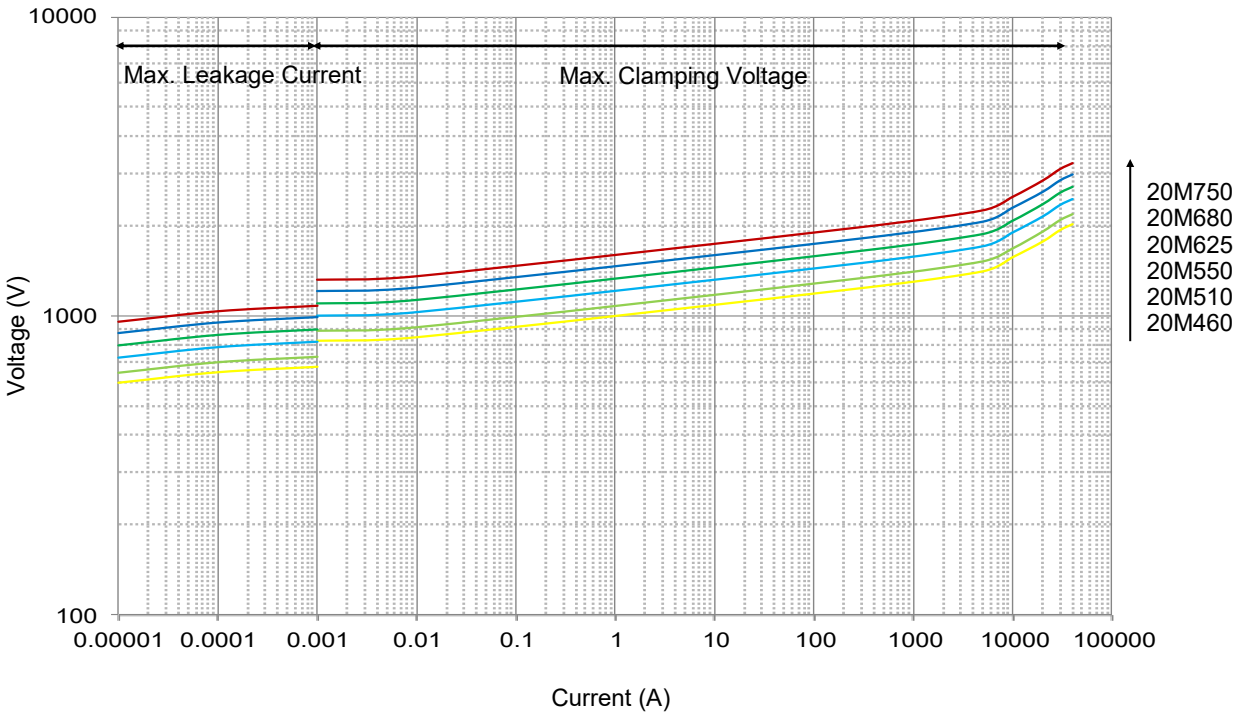

Packaging Information

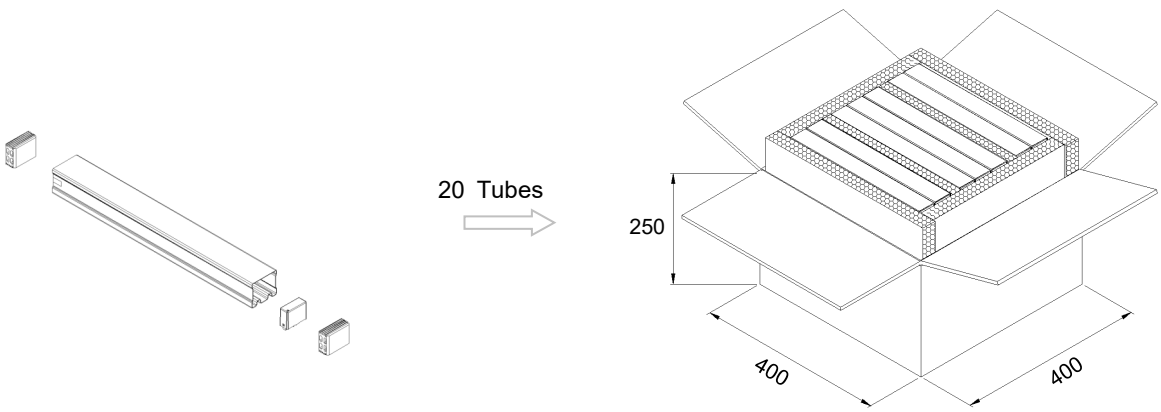

Unit: mm;

Please contact us if you have special packaging requirements.

Item	Tube	Carton
Dimensions (mm)	46 × 43 × 318	400 × 400 × 250
Quantity (PCS)	17	340

All Rights Reserved by Xiamen SET Electronics Co., Ltd. 2021-2023 V3.0

TFMOV
Thermally Protected Varistors

TFMOV25M Series

Description

TFMOV25M series is mechanical trip thermal-fused MOV, which combines a MOV and disconnecting apparatus that can monitor the status of the MOV, making the TFMOV a fail-safe device. This series products are approved by UL 1449 IEC/EN 61643-11 and EN 62643-31, commonly used in photovoltaic, communication etc., to protect the equipment from the damage of lightning surge. And, it is designed with unique structure to protect against the risk of fire due to over-heating or energy overstressing of varistors.

Features

- Mechanical Trip Thermal Protection and Fast Response
- Small Size, Space Saving
- With Remote Signal Contact
- Sealing Material, Flame-retardant to V0 (UL 94)
- Comply with IEC/EN 61643-11 and EN 61643-31

Approvals Information

Agency	Standards	No.
c UL us	UL 1449	E322662
TÜVRheinland	IEC/EN 61643-11 EN 61643-31	J 50522548 0001 J 50522558 0001
CE	IEC/EN 61643-11 EN 61643-31	AN 50522552 0001 AN 50522561 0001
Environment	RoHS 2.0 & REACH	Compliant

Applications

- Communication, Microcell
- Photovoltaic, String Inverter
- Power Supply, UPS
- Surge Protective Device (SPD)

Schematics

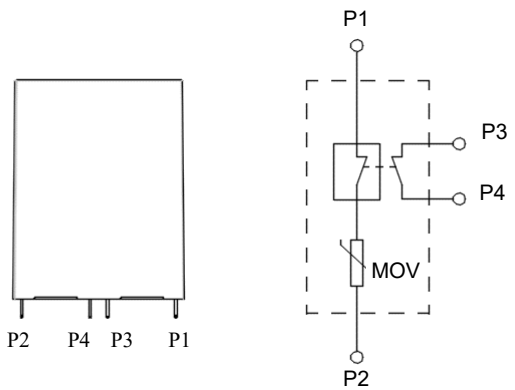

All Rights Reserved by Xiamen SET Electronics Co., Ltd. 2021-2023 V3.0

Dimensions (mm)

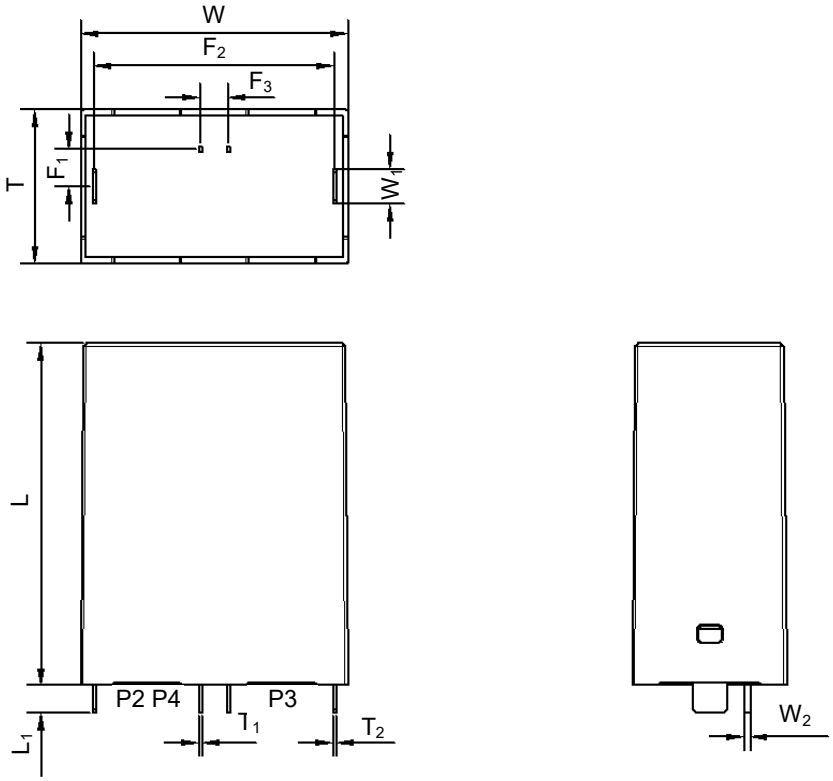

L	L_1	W	W_1	W_2	T
50.0±1.0	4.0±0.5	39.0±1.0	5.0±0.5	0.8±0.3	22.5±1.0
T_1	T_2	F_1	F_2	F_3	
0.5±0.2	0.5±0.2	5.5±0.5	35.0±0.5	4.0±0.5	

Specifications

Features	Specifications
According to Standard	UL 1449, EN 61643-31, EN 61643-11
Alarm	Remote + Indicator
Degree of protection of enclosure	IP20
Installation	PCB
Altitude	⩽ 5000 m
Operational Temperature Range	(-40 ~ 85) °C
Humidity Range	5 ~ 95%

All Rights Reserved by Xiamen SET Electronics Co., Ltd. 2021-2023 V3.0

Model	Nominal System Voltage	Nominal Varistor Voltage @1mA	Max. Continuous Operating Voltage		Nominal Discharge Current (8/20 μs)	Impulse Discharge Current (10/350 μs)	Max. Discharge Current (8/20 μs)	Voltage Protection Level	UL1449	IEC/EN 61643-11	IEC/EN 61643-31
	U_n	VDC	MCOV		I_n	I_{imp}	I_{max}	U_p			
	VAC(V)	(V)	U_c (VAC)	U_{cpv} (VDC)	(kA)	(kA)	(kA)	(V)	DC Type 4CA		
TFMOV25M385T1	277	620	385	505	20	7.5	40	1800	●		
TFMOV25M440T1	347	680	440	585	20	7.5	40	2100	●	●	
TFMOV25M510T1	347	820	510	670	20	6.5	40	2400	●		
TFMOV25M550T1	480	910	550	745	20	6.5	40	2700	●		
TFMOV25M575T1	480	950	575	760	20	6	40	2800	●		
TFMOV25M625T1	480	1000	625	825	20	6	40	2900	●		●
TFMOV25M680T1	480	1100	680	900	20	6	40	3000	●		

Notes:

1. The Value of Voltage Protection Level (U_p) is determined according to IEC 61643-11:2011 clause 6.4.
   Preferred values of voltage protection level (kV): 0.08, 0.09, 0.10, 0.12, 0.15, 0.22, 0.33, 0.4, 0.5, 0.6, 0.7, 0.8, 0.9, 1.0, 1.2, 1.5, 1.8, 2.0, 2.5, 3.0, 4.0, 5.0, 6.0, 8.0, 10.

All Rights Reserved by Xiamen SET Electronics Co., Ltd. 2021-2023 V3.0