Thermal-Link (OTCO)-Organic Type

RB Series I_r: 10A

Description

Organic Thermal-Link (OTCO) RB series is defined as a non-resettable protective device, functioning one time only. It mainly consists of metal case, spring, sliding contact and thermal pellet. When the Thermal-Link senses abnormal heat and temp. reaches the predetermined fusing temp., thermal pellet melts and the sliding contact separates from the isolated lead with the assistance of the trip spring, thereby the circuit is disconnected

SETsafe | SETfuse Organic Thermal-Link (OTCO) RB series Rated Functioning Temp. from 72 ℃ to 310 ℃, Rated Current: 10 A, Rated Voltage: 250VAC, safety certification Includes CCC, and complies with RoHS and REACH.

Features

- High Accuracy of Functioning Temp.
- Non-Resettable
- Organic Thermal Pellet
- Metal Case
- Low Resistance
- RoHS & REACH Compliant

Applications

- Kitchen and Toilet Appliance
- Personal Care Appliance
- Environment Appliances
- Cleaning Appliances
- Electric Tool
- Office Equipment
- Automotive Electronics

Customization

- Other Temp.
- The Length of Lead Wires
- Taping Packing Available
- Leads Forming Types

Cylindrical Structure Diagrams

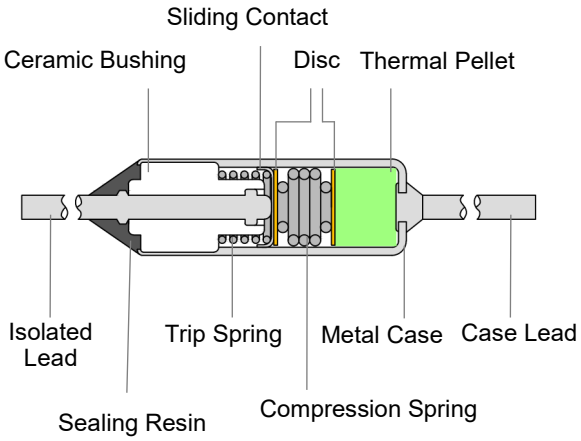

Square Structure Diagrams

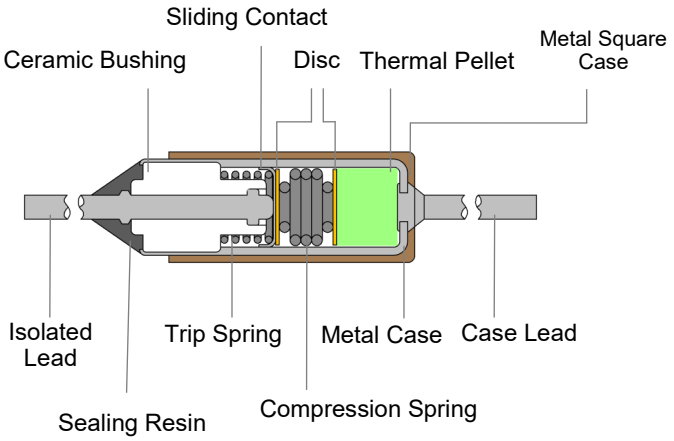

Cylindrical Structure Marking

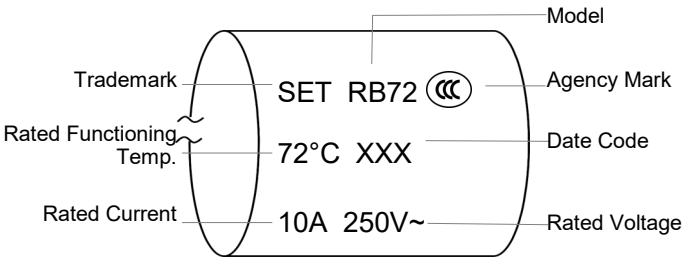

Square Structure Marking

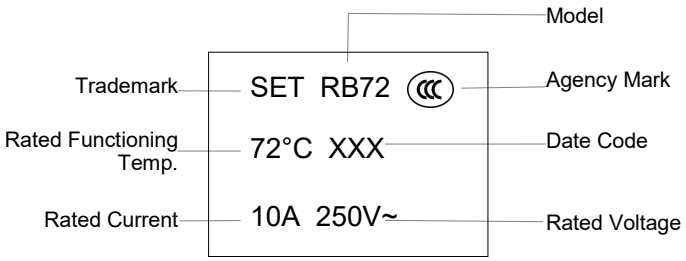

Remark: The Date Code means Year and quarter: A stands for 2000, B stands for 2001 and 01 stands for the first quarter, 02 stands for the second quarter, and so on.

All Rights Reserved by Xiamen SET Electronics Co., Ltd. 2024-2026 V1.2

Cylindrical Structure Dimensions (mm)

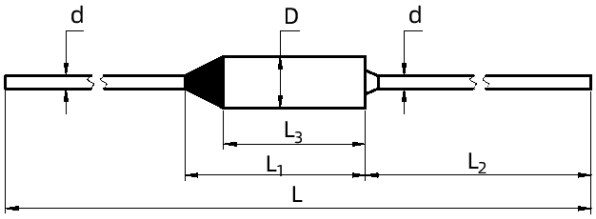

Lead Length	L	L_1	L_2	L_3	D	d
Standard	65 ± 3	(14)	35 ± 2	(11.3)	Φ 4 ± 0.2	Φ 1 ± 0.1
Long	81 ± 3	(14)	35 ± 2	(11.3)	Φ 4 ± 0.2	Φ 1 ± 0.1
Option	Customization	(14)	Customization	(11.3)	Φ 4 ± 0.2	Φ 1 ± 0.1

Remark: The dimensions in parentheses are for reference only.

Square Structure Dimensions (mm)

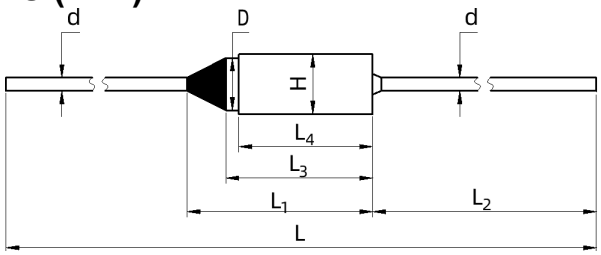

Lead Length	L	L_1	L_2	L_3	L_4	D	H	d
Standard	65 ± 3	(14)	35 ± 2	(11.3)	10.3 ± 0.5	Φ 4 ± 0.2	4.6 ± 0.3	Φ 1 ± 0.1
Long	81 ± 3	(14)	35 ± 2	(11.3)	10.3 ± 0.5	Φ 4 ± 0.2	4.6 ± 0.3	Φ 1 ± 0.1
Option	Customization	(14)	Customization	(11.3)	10.3 ± 0.5	Φ 4 ± 0.2	4.6 ± 0.3	Φ 1 ± 0.1

Remark: The dimensions in parentheses are for reference only.

Agency Information

Agency Symbol	Standards	The File No. and certification No. obtained by SETsafe | SETfuse
CCC	GB/T 9816.1	2020980205000192

All Rights Reserved by Xiamen SET Electronics Co., Ltd. 2024-2026 V1.2

Specifications

Rated Functioning Temp. (T_f) °C

	Model	Fusing Temp.	T_h	T_m	I_r	U_r	I_n	I_{max}	CCC	RoHS REACH
		(°C)	(°C)	(°C)	(A)	(VAC)	(kA)	(kA)		
310	RB310	304 ± 3	215	500	10	250	1.5	3	●	●
275	RB275	271 ± 4	215	500	10	250	1.5	3	●	●
263	RB263	261 +2/-3	205	480	10	250	1.5	3	●	RoHS ● REACH *
257	RB257	254 ± 3	200	480	10	250	1.5	3	●	●
240	RB240	238 +2/-3	200	450	10	250	1.5	3	●	●
229	RB229	227 +2/-3	200	450	10	250	1.5	3	●	●
216	RB216	213 ± 3	186	450	10	250	1.5	3	●	●
205	RB205	203 +2/-3	177	450	10	250	1.5	3	●	●
192	RB192	190 +2/-3	162	300	10	250	1.5	3	●	●
184	RB184	181 ± 3	154	250	10	250	1.5	3	●	●
172	RB172	168 ± 3	143	260	10	250	1.5	3	●	●
167	RB167	164 ± 3	137	220	10	250	1.5	3	●	●
157	RB157	155 +2/-3	129	450	10	250	1.5	3	●	●
152	RB152	149 ± 3	122	205	10	250	1.5	3	●	●
144	RB144	141 ± 3	114	300	10	250	1.5	3	●	●
134	RB134	131 ± 3	104	250	10	250	1.5	3	●	●
128	RB128	124 ± 3	98	200	10	250	1.5	3	●	●
121	RB121	118 ± 3	93	300	10	250	1.5	3	●	●
117	RB117	114 ± 3	88	200	10	250	1.5	3	●	●
110	RB110	108 +2/-3	82	240	10	250	1.5	3	●	●
104	RB104	102 +2/-3	74	250	10	250	1.5	3	●	●
99	RB99	95 ± 3	69	200	10	250	1.5	3	●	●
94	RB94	91 ± 3	64	300	10	250	1.5	3	●	●
84	RB84	82 +2/-3	54	200	10	250	1.5	3	●	●
77	RB77	74 ± 3	50	300	10	250	1.5	3	●	●
72	RB72	69 ± 3	42	180	10	250	1.5	3	●	●

Note:

1. "●"Means certificated, "○"Means non-certificated, "⊙"Means Certification in progress, RoHS & REACH Compliant ." * " indicates that RB263 complies with REACH Directive 1907/2006/EC, SVHC Candidate List, Batch 29, Item 235 for most of the content (please consult SET for details).

All Rights Reserved by Xiamen SET Electronics Co., Ltd. 2024-2026 V1.2

Cylindrical Structure Temp. Rise (Reference)

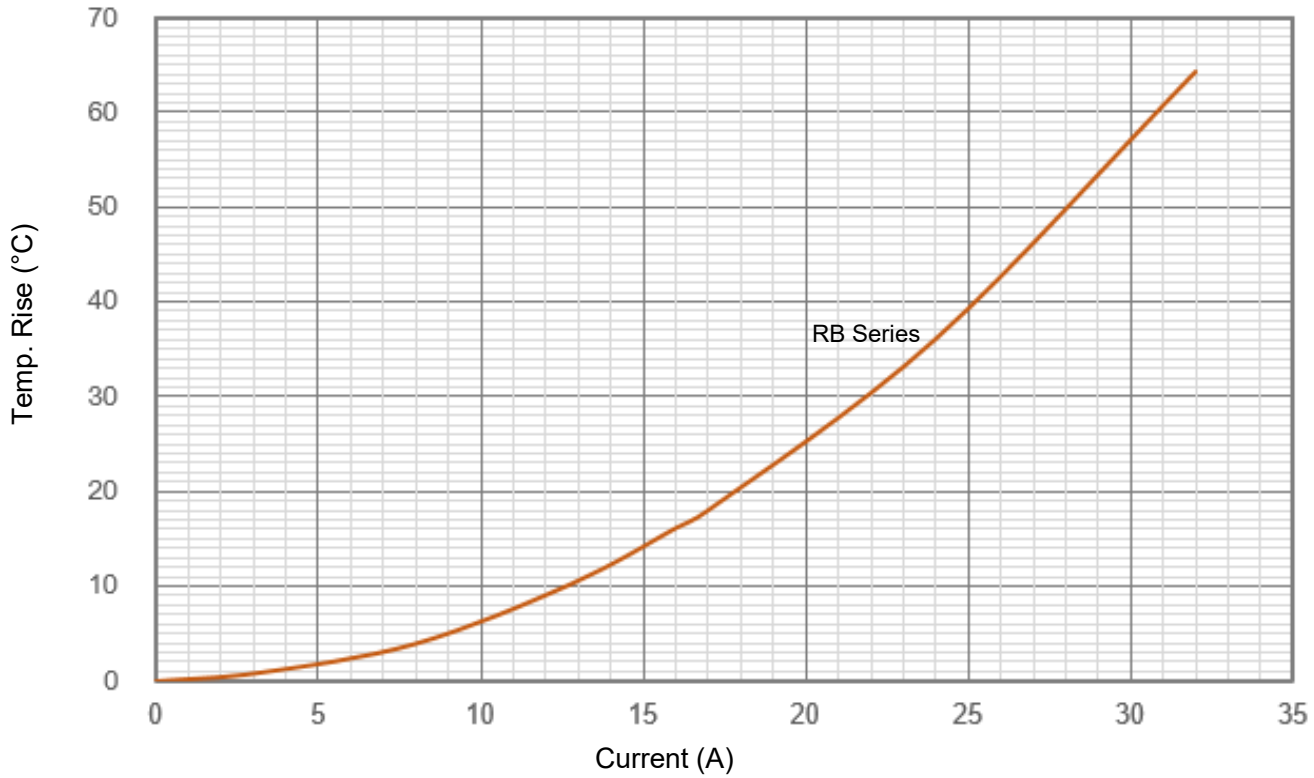

Cylindrical Structure Response Time (Reference)

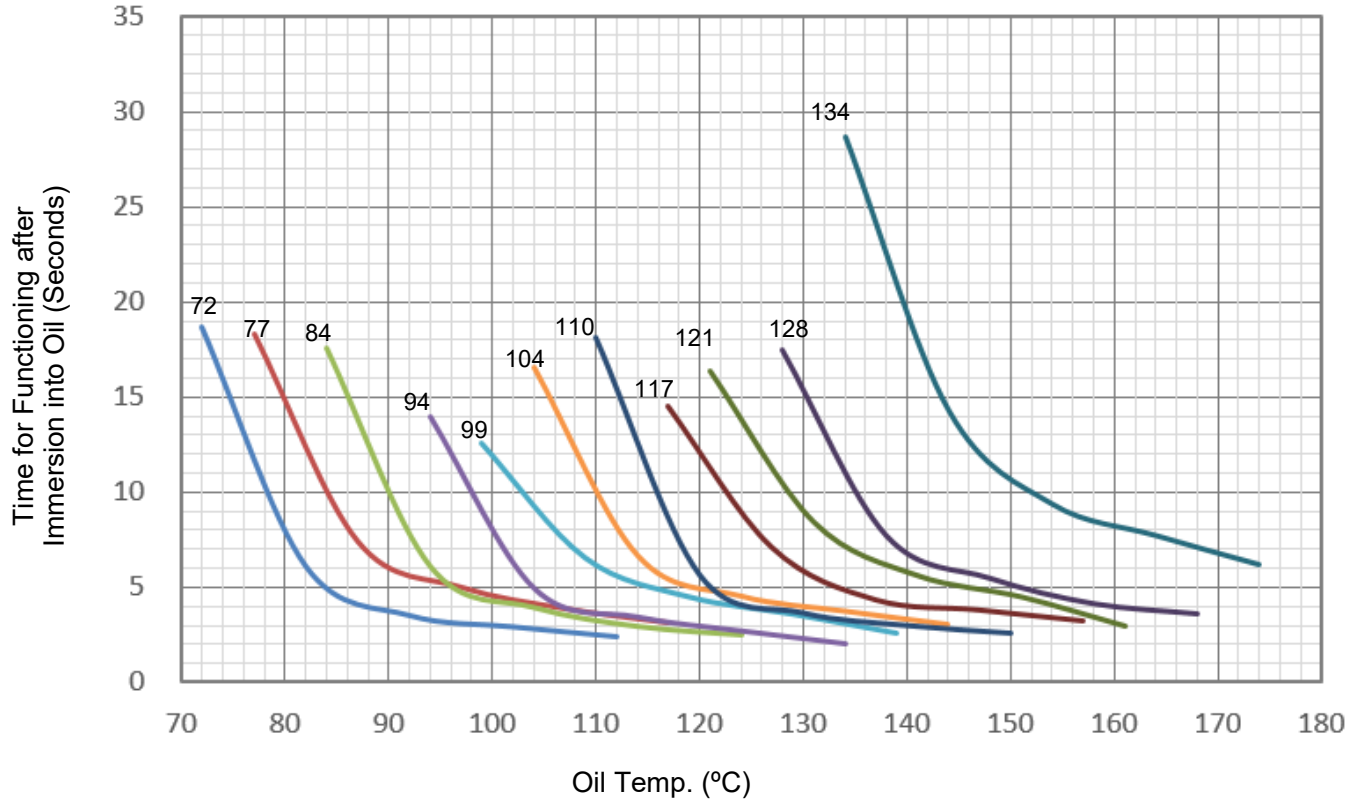

All Rights Reserved by Xiamen SET Electronics Co., Ltd. 2024-2026 V1.2

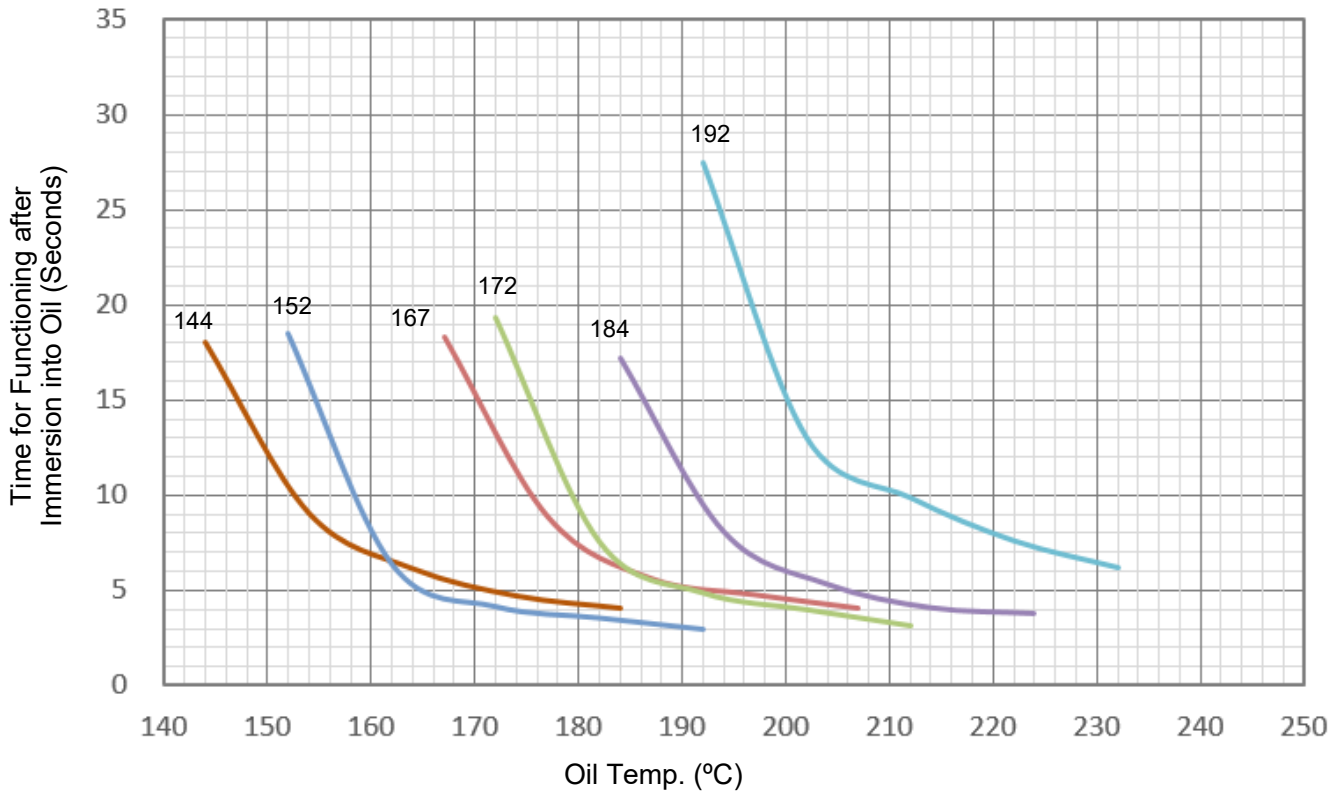

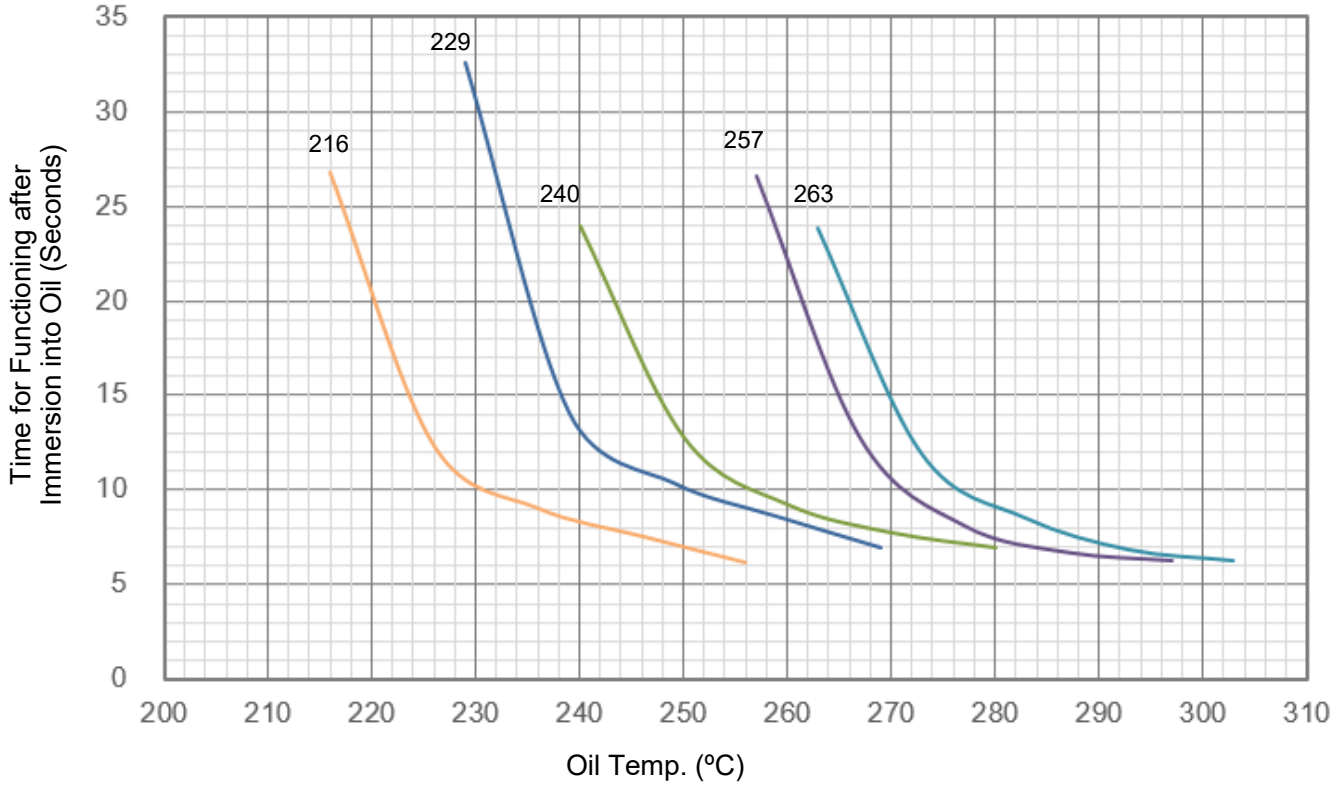

Note: The response time of 157/205/275/310 are testing, the temperature rise and response time testing of square products are continuously being updated. If you require any data, please consult SET.

All Rights Reserved by Xiamen SET Electronics Co., Ltd. 2024-2026 V1.2

Packaging Information

1.Bulk

Item	PE Bag	PE Bag	Carton
Dimensions (mm)	135 x 85	220 x 190	346 x 316 x 156
Quantity (PCS)	100	1000	10000
Gross Weight (kg)			Cylindrical: 11 ± 10% Square: 18 ± 10%

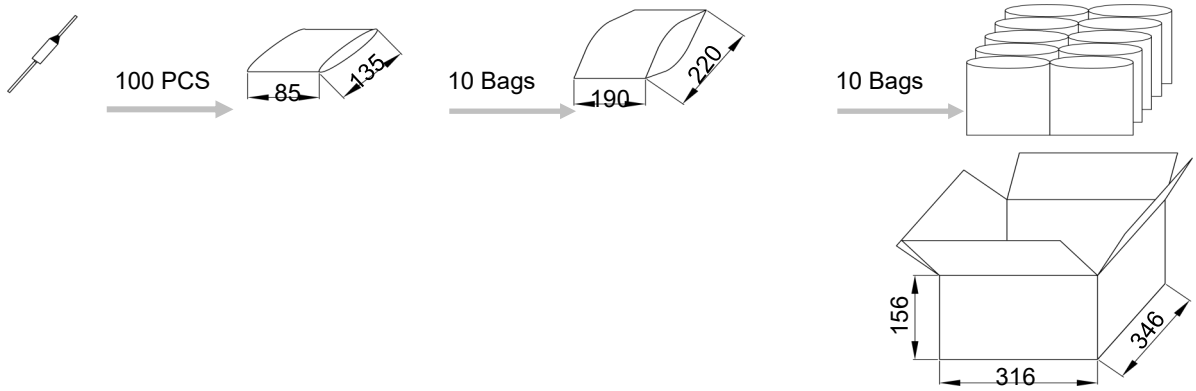

2.Taping

Item	**Scroll**	Box	Carton
Dimensions (mm)	Φ 250 x Φ 85 x 70	258 x 258 x 82	455 x 315 x 285
Quantity (PCS)	2000	2000	10000
Gross Weight (kg)			Cylindrical: 12.7 ± 10% Square: 19.7 ± 10%

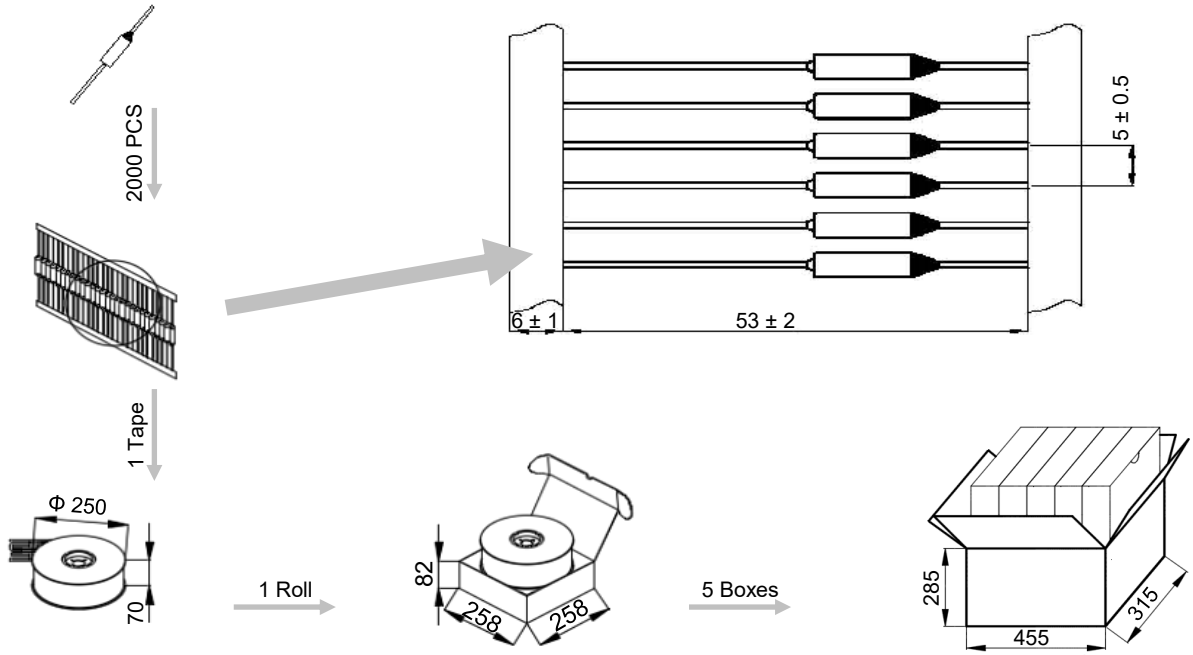

All Rights Reserved by Xiamen SET Electronics Co., Ltd. 2024-2026 V1.2

Part Numbering System

OTCO - RB 72 - L S A B - 001

Other Options

Packing

B	Bulk
T	Taping

Leads Forming

A	Straight Lead
B	Single Lead Bending
C	Leads Bending

Lead Length

S	Standard
L	Long
O	Option

Process of Mark

L	Laser

Rated Functioning Temp.

72	72 °C, See Specifications

Series

RB	Series See Specifications

Product Category

OTCO	Organic Thermal-Link

All Rights Reserved by Xiamen SET Electronics Co., Ltd. 2024-2026 V1.2

Glossary

Item	Description
TCO	**Thermal-Link** A non-resettable device incorporating a THERMAL ELEMENT which will open a circuit once only when exposed for a sufficient length of time to a temperature in excess of that for which it has been designed. — (GB 9816.1)
OTCO	**Organic Thermal-Link** Organic type Thermal-Link, organic is the THERMAL ELEMENT.
T_f	**Rated Functioning Temp.** The temperature of the Alloy Thermal-Link which causes it to change the state of conductivity with a detection current up to 10 mA as the only load. — (GB 9816.1) Tolerance: T_f °C (GB 9816.1, EN 60691, K60691). Tolerance: T_f ± 7 °C (J60691).
Fusing Temp.	**Fusing Temp.** The temperature of the Alloy Thermal-Link which causes it to change its state of conductivity is measured with silicone oil bath in which the temperature is increased at the rate of 0.5 °C to 1 °C / minute, with a detection current up to 10 mA as the only load. — (GB 9816.1)
T_h	**Holding Temp.** The Maximum temperature at which a Alloy Thermal-Link will not change its state of conductivity when conducting rated current for 168 hours. — (GB 9816.1)
T_m	**Maximum Temp. Limit** The temperature of the Alloy Thermal-Link stated by the manufacturer, up to which the mechanical and electrical properties of the Alloy Thermal-Link having changed its state of conductivity, will not be impaired for a given time. — (GB 9816.1)
I_r	**Rated Current** The current used to classify a Alloy Thermal-Link, which is the Maximum current that Alloy Thermal-Link allows to carry and is able to cut off the circuit safely. — (GB 9816.1)
U_r	**Rated Voltage** The voltage used to classify a Alloy Thermal-Link, which is the Maximum voltage that Alloy Thermal-Link allows to carry and is able to cut off the circuit safely. — (GB 9816.1)
I_n	**Nominal Discharge Current** Being able to withstand 15 peak currents of waveform 8/20 μs to test the product's durability of withstanding pulse current. — (UL 1449)
I_{max}	**Max. Discharge Current** Being able to withstand 1 peak current of waveform 8/20 μs to test max. pulse current that the product can withstand. — (UL 1449)

All Rights Reserved by Xiamen SET Electronics Co., Ltd. 2024-2026 V1.2

ATTENTION

Usage

1. Please use OTCO without exceeding the rated current and voltage.
2. Do not use the OTCO in environments out of the standard specifications, such as those containing sulfur dioxide gas, nitrogen oxide gas, ammonia gas or formic acid. It is also not suitable for using in high humidity environment or immersed in liquid.

Replace

OTCO is a non-repairable product. For safety aspect, it shall be replaced by an equivalent OTCO from the same manufacturer, and mounted in the same way.

Storage

1. OTCO must be kept in a place with no sunshine or corrosive gas, the temperature shall be within 10 °C ~ 30 °C and humidity within 30 % ~ 70 %. The validity storage period of OTCO is 12 months after purchase.
2. The case and isolated lead of OTCO are silver-plated. Therefore, to avoid vulcanization, the OTCO shall not be kept around materials such as cardboard or rubber etc. which generate sulfurous acid gas.

All Rights Reserved by Xiamen SET Electronics Co., Ltd. 2024-2026 V1.2

Lead Process

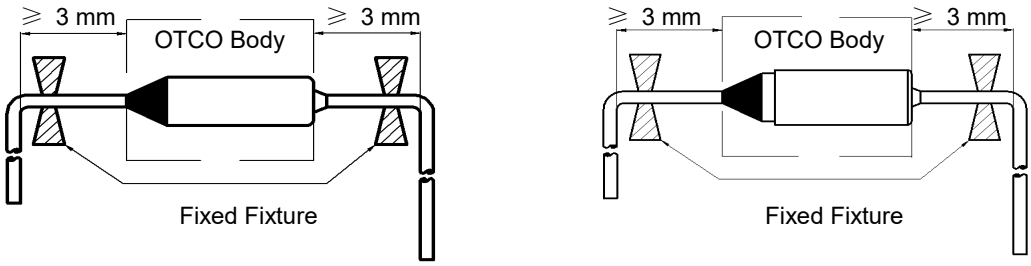

FIGURE 1

1. If lead wires has to be bent, it is important not to apply excessive pressure to the root of the lead wires. The tensile forces applied to the lead wires shall not exceed 15.7 N, and the thrust force applied to the lead wires shall not exceed 3.9 N.
2. The lead wires should be bent at a distance 3 mm or above from the body of OTCO (see Fig.1).
3. To avoid damaging the OTCO, when bending lead wires, please use pincher or similar tools to fix the OTCO.

Installation

Selection of Installation Location

1. Do not locate the OTCO in a place where severe vibration always occurs.
2. To reduce the deviations between the temperature design and the actual situation, it is recommended that the OTCO be install ed in close to the thermostat or temperature sensor.

Make Sure the Temp. of Installation Location

1. The body of OTCO will generate heat as current flows through it, resulting the body temp. higher than ambient temp. The influence of temp. rise shall be considered in the design to determine the appropriate OTCO model.
2. It Considering possible temperature shock situations, it is recommended that the temperature of the body and the ambient temperature of the installation location during the operation of the temperature fuse should not exceed (Th-10)°C.
3. The end product should be tested to ensure that potential abnormal conditions do not cause ambient temp. to exceed the T_m of the OTCO.

Mounting OTCO

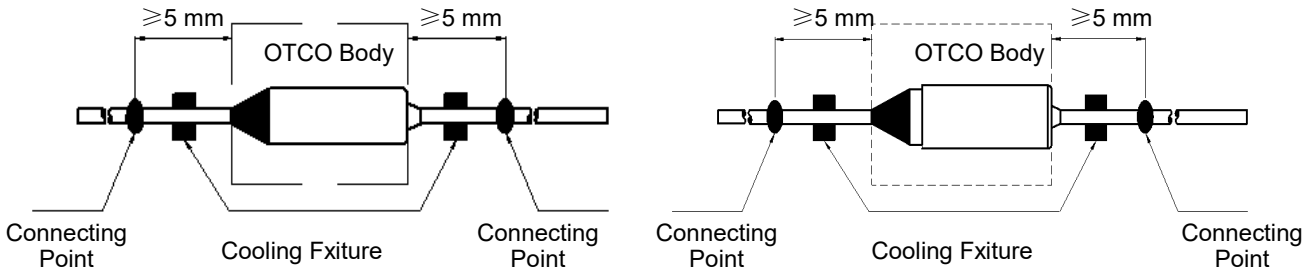

FIGURE 2

1. OTCO can be installed by soldering, welding, riveting or crimping. During and after installation, please do not pull, push or twist OTCO body or lead wires.
2. The connection point of the lead shall be no less than 5 mm away from the OTCO body (see Fig.2).
3. Try to ensure that the body of the OTCO is evenly heated. If the temp. difference is inevitable, make sure that the sealing resin side is connected close to the heat source.

All Rights Reserved by Xiamen SET Electronics Co., Ltd. 2024-2026 V1.2

Soldering

1. Soldering should be carried out according to below table. If secondary soldering is required, wait until the OTCO cools to room temp.
2. Soldering is not recommended for Thermal-Link with $T_f \leq 110°C$, while non heating processes such as crimping and riveting are recommended.
3. In the process of soldering, cooling fixture should be used between soldering point and OTCO body (see Fig.2).
4. It is recommended to take X-ray after soldering, to confirm that the thermal pellet has no shrinkage after soldering.

TABLE 1: Max. Allowable Soldering Time for Different Length of Soldering Point from OTCO Body

Rated Functioning Temp. (T_f)	Length	Time	Length	Time	Length	Time	Max. Soldering Temp.
(°C)	(mm)	(s)	(mm)	(s)	(mm)	(s)	(°C)
≤ 110	5	N / A	15	N / A	25	N / A	400
111 ~ 150	5	N / A	15	1	25	2	
151 ~ 190	5	1	15	2	25	3	
≥ 191	5	1	15	3	25	5	

Welding

1. Avoid welding current flowing into the inside of the OTCO. The welding current will cause the internal parts to be welded together, resulting in the failure function of OTCO.
2. During the welding process, the lead wires of the OTCO must be supported to avoid the damage of the OTCO.
3. In the process of welding, cooling fixture should be used between welding point and OTCO body (See Fig.2).
4. It is recommended to take X-ray after welding, to confirm that the thermal pellet has no shrinkage after welding.

Riveting or Crimping

1. Select materials with low resistance (such as copper) for riveting and crimping.
2. Contact resistance shall be as small as possible. Large contact resistance will cause high temp. to make OTCO open in advance.
3. It is better to crimp OTCO leads to stranded lead wires rather than solid wires as the stranded wire may be crimped tighter and maintain better electrical contact during temp. cycling.
4. During the riveting and crimping process, ensure that the lead wires shall not be reversed, sealing resin shall not be destroyed.
5. When the working temp. exceeds 150°C, soldering reinforcement is recommended after riveting and crimping.

The isolated lead is forbidden to contact OTCO body directly to avoid short circuit (See Fig.3).

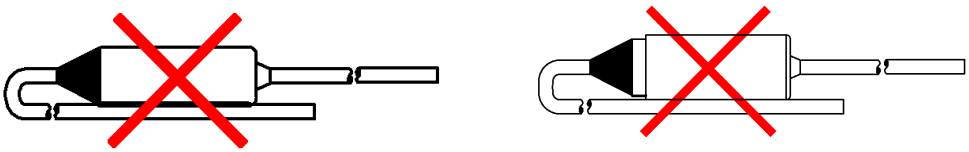

FIGURE 3

All Rights Reserved by Xiamen SET Electronics Co., Ltd. 2024-2026 V1.2

Thermal-Link (OTCO) - Organic Type Features & Model List Overview

Rated Functioning Temp. T_f (°C)	Model							
310	RB310	RS310	RT310	RK310	RU310	RP310	RL310	RM310
275	RB275	RS275	RT275	RK275	RU275	RP275	RL275	RM275
263	RB263	RS263	RT263	RK263	RU263	RP263	RL263	RM263
257	RB257	RS257	RT257	RK257	RU257	RP257	RL257	RM257
240	RB240	RS240	RT240	RK240	RU240	RP240	RL240	RM240
229	RB229	RS229	RT229	RK229	RU229	RP229	RL229	RM229
216	RB216	RS216	RT216	RK216	RU216	RP216	RL216	RM216
205	RB205	RS205	RT205	RK205	RU205	RP205	RL205	RM205
192	RB192	RS192	RT192	RK192	RU192	RP192	RL192	RM192
184	RB184	RS184	RT184	RK184	RU184	RP184	RL184	RM184
172	RB172	RS172	RT172	RK172	RU172	RP172	RL172	RM172
167	RB167	RS167	RT167	RK167	RU167	RP167	RL167	RM167
157	RB157	RS157	RT157	RK157	RU157	RP157	RL157	RM157
152	RB152	RS152	RT152	RK152	RU152	RP152	RL152	RM152
144	RB144	RS144	RT144	RK144	RU144	RP144	RL144	RM144
134	RB134	RS134	RT134	RK134	RU134	RP134	RL134	RM134
128	RB128	RS128	RT128	RK128	RU128	RP128	RL128	RM128
121	RB121	RS121	RT121	RK121	RU121	RP121	RL121	RM121
117	RB117	RS117	RT117	RK117	RU117	RP117	RL117	RM117
110	RB110	RS110	RT110	RK110	RU110	RP110	RL110	RM110
104	RB104	RS104	RT104	RK104	RU104	RP104	RL104	RM104
99	RB99	RS99	RT99	○	○	○	RL99	○
98	○	○	○	RK98	RU98	RP98	○	RM98
94	RB94	RS94	RT94	RK94	RU94	RP94	RL94	RM94
84	RB84	RS84	RT84	RK84	RU84	RP84	RL84	RM84
77	RB77	RS77	RT77	RK77	RU77	RP77	RL77	RM77
72	RB72	RS72	RT72	RK72	RU72	RP72	RL72	RM72
I_r (A) Rated Current	10	10 / 15	16	20	25	30	16	25
U_r Rated Voltage (VAC)	250 VAC							
U_r Rated Voltage (VDC)							24 VDC	48 VDC
Product Structure	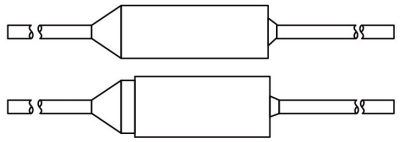							

All Rights Reserved by Xiamen SET Electronics Co., Ltd. 2024-2026 V1.2