Low Voltage Fuses (LV Fuses)

LFR20N-XXXA-BT Series

Dimensions (mm)

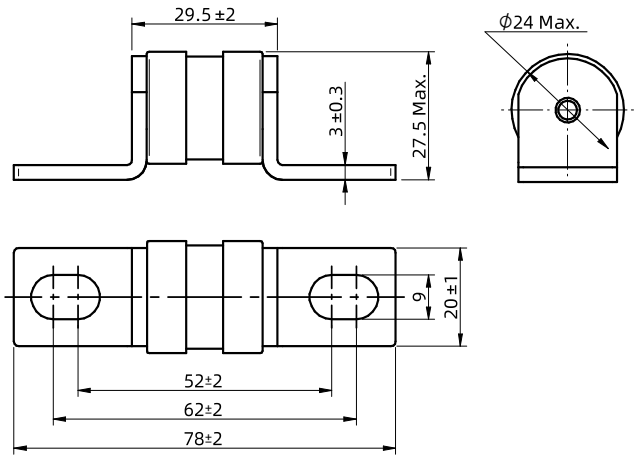

Key Features

- Rated Voltage: 250 VDC
- Breaking Capacity: 50 kA
- Fusing Characteristics: High Speed Fuse
- Utilization Category: aR / aBat
- Designed to IEC 60269-7 / UL 248-13 / GB/T 13539.7
- Good Current Limiting Capability
- Body Size: Φ23.5 x 29.5 mm
- RoHS and REACH Compliant, Pb Free

Applications

- Inverter
- Rectifier
- Power Supply
- Semiconductor Equipment
- Energy Storage System (ESS)
- Power Battery System
- DC Charging Pile
- Cable
- Vehicle Equipment

Part Numbering System

LFR20N - 100A - BT

- BT: Mounting Bolt Tag
- 100A: Rated Current 32 A, 40 A, 50 A, 63 A, 80 A, 100 A, 125 A, 160 A, 200 A, 250 A
- LFR20N: Series

Specifications

Model	Rated Current I_n	Rated Voltage U_n	Breaking Capacity I_1	Watts Loss	CE	TUV	RoHS REACH Pb Free
	(A)	(VDC)	(kA)	(W)	CE	TUV	
LFR20N-32A-BT	32	250	50	4.0	○	○	●
LFR20N-40A-BT	40	250	50	5.5	○	○	●
LFR20N-50A-BT	50	250	50	8.5	○	○	●
LFR20N-63A-BT	63	250	50	10	○	○	●
LFR20N-80A-BT	80	250	50	11	○	○	●
LFR20N-100A-BT	100	250	50	13	○	○	●
LFR20N-125A-BT	125	250	50	15	○	○	●
LFR20N-160A-BT	160	250	50	20	○	○	●
LFR20N-200A-BT	200	250	50	25	○	○	●
LFR20N-250A-BT	250	250	50	34	○	○	●

Note: 1. "○": Pending; "●": RoHS and REACH Compliant, Pb Free.

2. M8 bolts and nuts are recommended, recommended installation torque 12 N·m.

Copyright Belongs to XIAMEN SET Electronics CO. LTD. 2024-2026 V1.1

Agency Information

Rated Current I_n (A)	Agency Symbol	Standards	The File No. and certification No. obtained by SETsafe | SETfuse	Utilization Category
32 ~ 250	CE	EN IEC 60269-7	Pending	aBat
		EN IEC 60269-7	Pending	aBat

Time-Current Characteristics (For Reference Only)

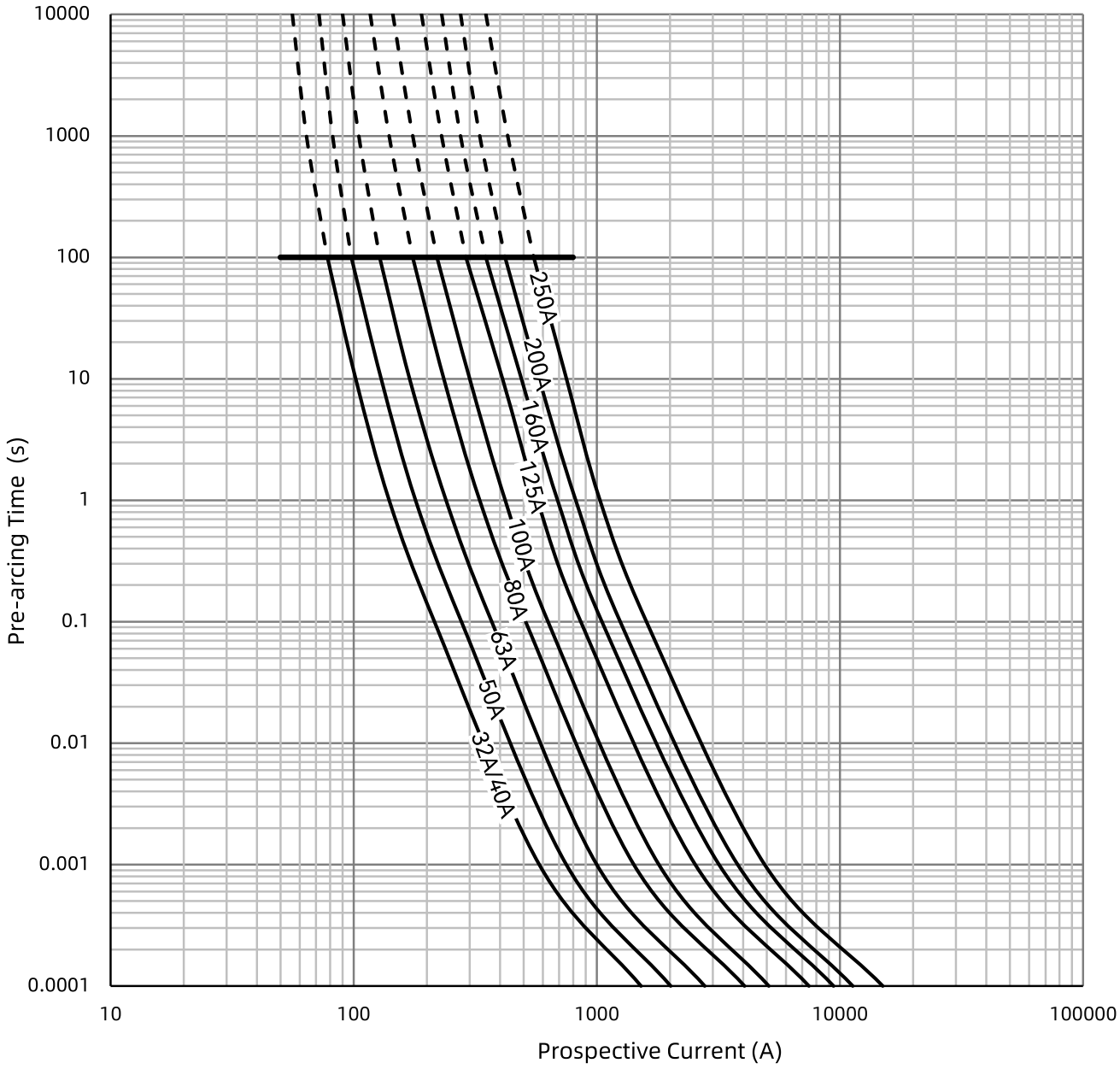

Copyright Belongs to XIAMEN SET Electronics CO. LTD. 2024-2026 V1.1

Power Dissipation Curve (For Reference Only)

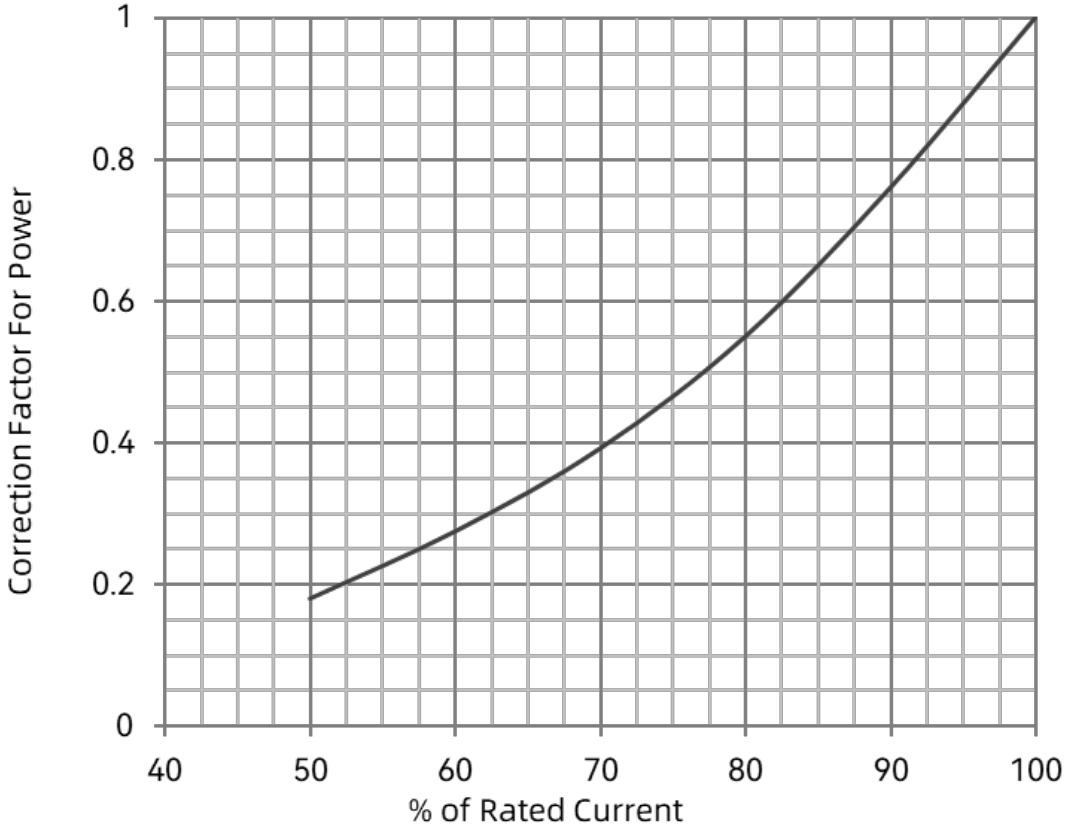

Packaging

Item	Pearl Cotton Pallet		Carton
Product Quantity (PCS)	30		150
Product Weight (g)	74.5±3	Gross Weight (kg)	11.7±0.5

Packaging Drawing:

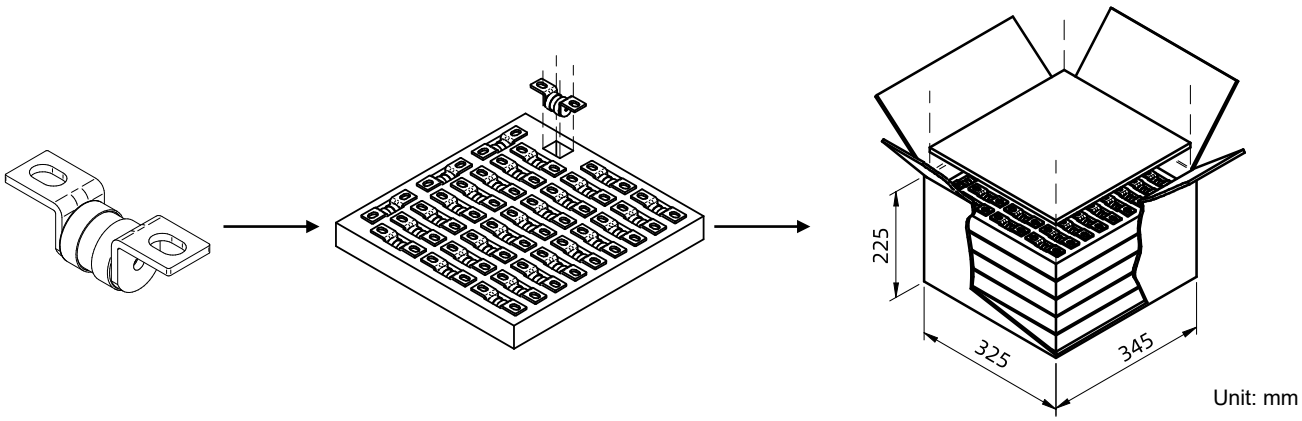

30 PCS / Pallet

5 Pallet / Carton

Copyright Belongs to XIAMEN SET Electronics CO. LTD. 2024-2026 V1.1

Rated Current Derating Curve

Ambient Temperature (For Reference Only)

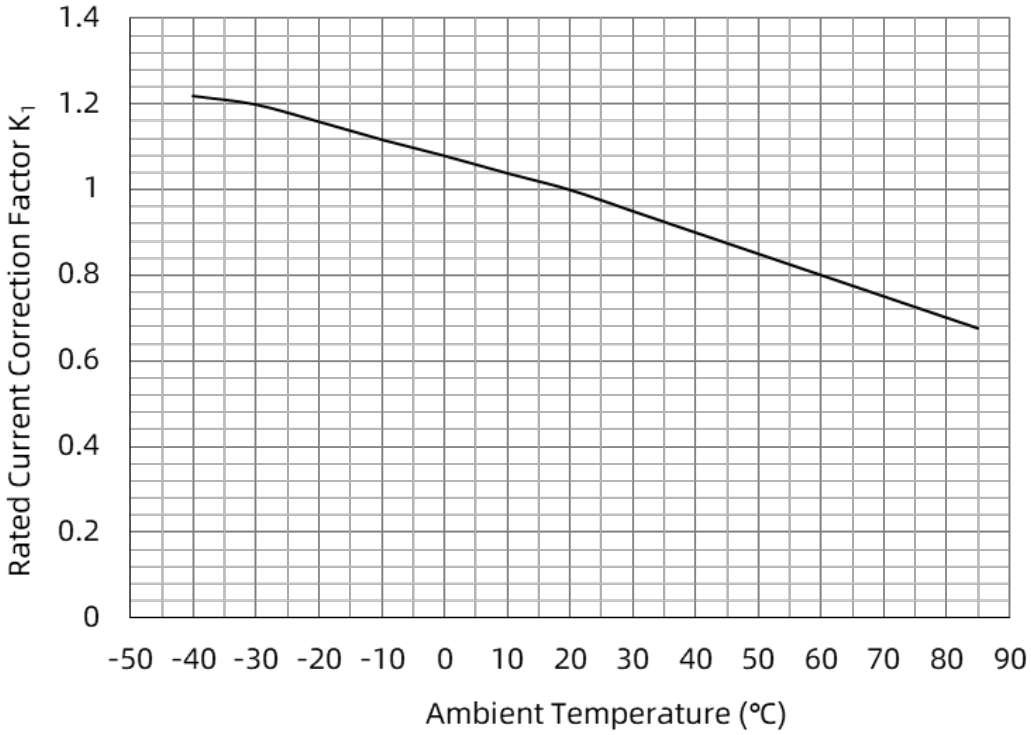

Connecting Conductor (For Reference Only)

The current density of copper bar for fuse installation is suggested to be 1.3 A/mm^2. If the carrying current density of copper bar is greater than 1.3 A/mm^2, it is recommended to reduce the rated current of fuse appropriately.

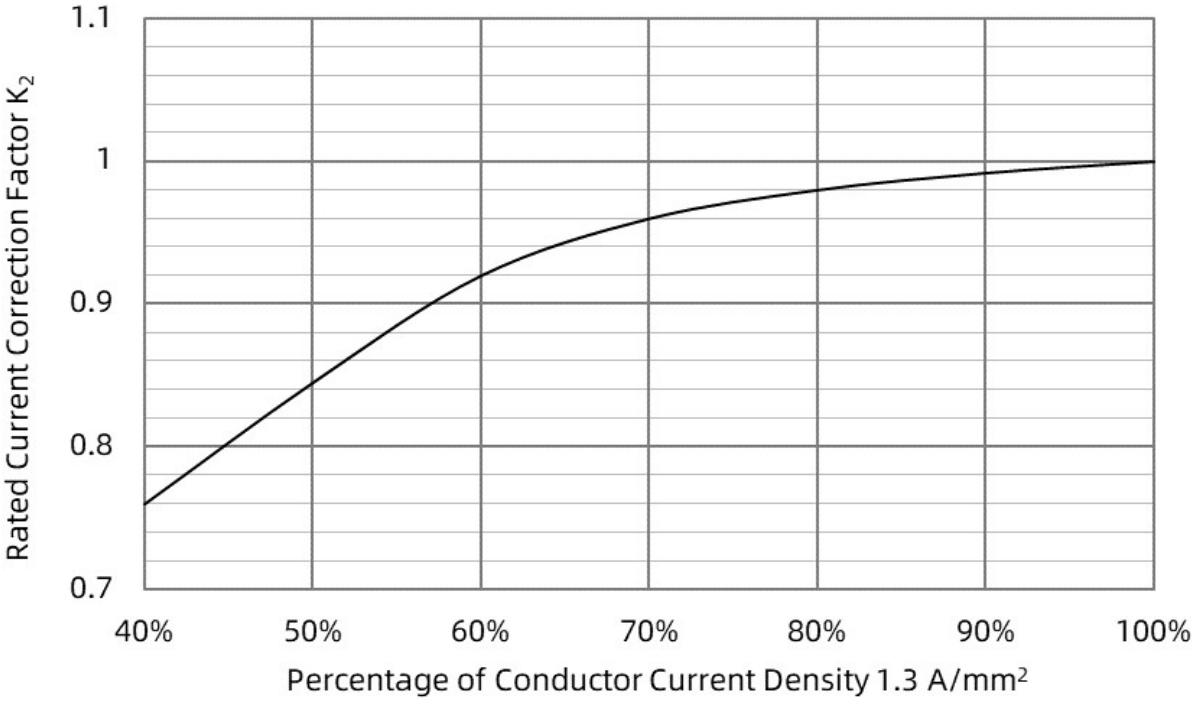

Copyright Belongs to XIAMEN SET Electronics CO. LTD. 2024-2026 V1.1

Cooling Air (For Reference Only)

When the fuse operates in the environment with cooling air, the rated current value of the fuse needs to be corrected.

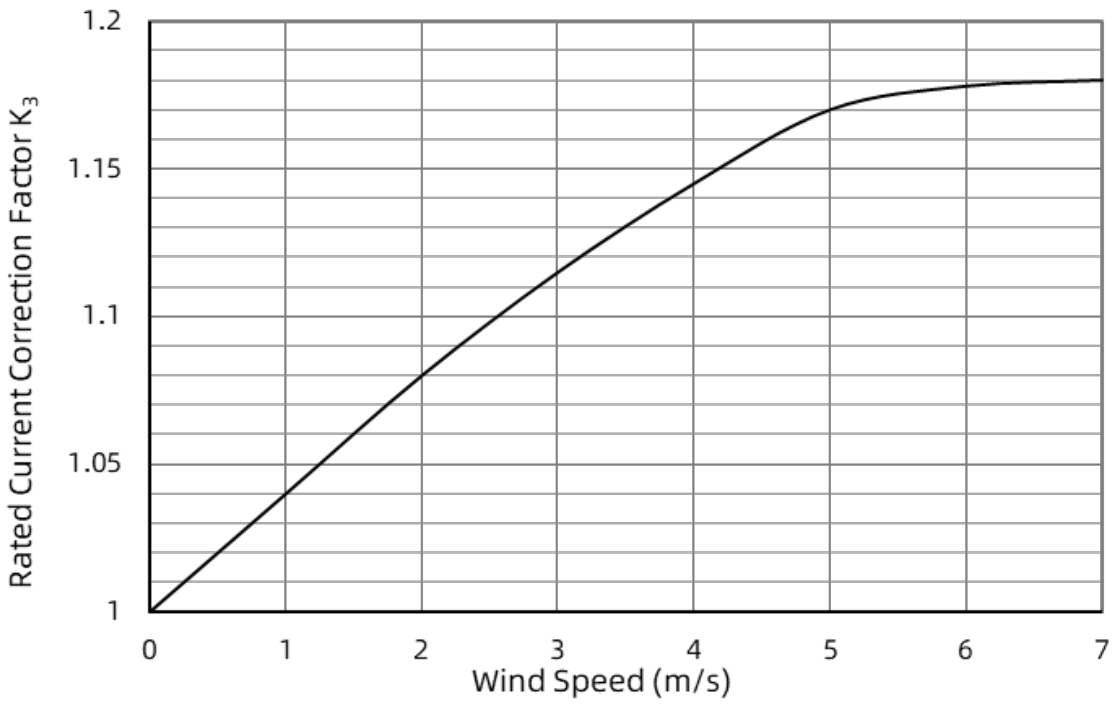

Altitude (For Reference Only)

Altitude (m)	Derating Factor K_4
2000	1.000
2500	0.975
3000	0.950
3500	0.925
4000	0.900
4500	0.875
5000	0.850

Rated Current:

$$I_n \geq \frac{K_0 I_c}{K_1 K_2 K_3 K_4 K_5}$$

I_c — Long-term continuous operating current

K_0 — Reliability factor: 1.25 (Reference DLT 5044-2014)

K_1 — Ambient temperature correction factor

K_2 — Correction factor for connecting conductors

K_3 — Cooling air correction factor

K_4 — Altitude correction factor

K_5 — Closed environment correction factor, for the better heat dissipation conditions of the box to take 0.9 ~ 0.95, while for the poorer take 0.8

Copyright Belongs to XIAMEN SET Electronics CO. LTD. 2024-2026 V1.1

ATTENTION

Replacement

The fuse is a non-resettable product, for safety reasons, lease ensure that the spare fuse is same model.

Installation Position

Do not install the fuse on an assembly that may often subject to severe continuous vibration or with corrosive gases (NH_3, SO_2, Cl_2 etc.).

Transportation

During packaging and transportation, rain and snow and mechanical damage shall be avoided.

Storage Conditions and Effective Date

- Storage temperature: 10 ° C~30 ° C.
- Storage humidity: 30%~70%.
- Sealed in a place with no sunshine no pollution and without corrosive gases(NH_3,SO_2,Cl_2, etc.).
- Validity period: 12 consecutive months after you receive it.

Copyright Belongs to XIAMEN SET Electronics CO. LTD. 2024-2026 V1.1

Glossary

Item	Description
Fuse	Device that by the fusing of one or more of its specially designed and proportioned components opens the circuit in which it is inserted by breaking the current when this exceeds a given value for a sufficient time. —(IEC 60269-1)
Rated Current of a fuse-link I_n	Value of current that fuse-link can carry continuously without deterioration under specified conditions. —(IEC 60269-1)
Prospective Current (of a circuit and with respect to a fuse)	Current that would flow in the circuit if each pole of the fuse were replaced by conductor of negligible impedance. —(IEC 60269-1)
Rated Voltage U_n	A maximum open circuit voltage in which a fuse can be used, yet safely interrupt an overcurrent. Exceeding the voltage rating of a fuse impairs its ability to clear an overload or short circuit safely. —(IEC 60269-1)
Ampere Squared Seconds I^2t	The melting, arcing, or clearing integral of a fuse, termed I^2t, is the thermal energy required to melt, arc, or clear a specific current. It can be expressed as melting I^2t, arcing I^2t or the sum of them, clearing I^2t. —(IEC 60269-1)
Time-current Characteristics	Current giving the time, e.g. pre-arcing time or operating time as a function of the prospective current under stated conditions of operation. —(IEC 60269-1)
Breaking Capacity	Value of prospective current that a fuse is capable of breaking at a stated voltage under prescribed conditions of use and behavior. —(IEC 60269-1)
Breaking Range	Breaking range is a range of prospective currents within which the breaking capacity of a fuse-link is assured. —(IEC 60269-1)
Pre-arcing Time / Melting Time	Interval of time between the beginning of a current large enough to cause a break in the fuse-element(s) and the instant when an arc is initiated. —(IEC 60269-1)
Arcing Time	Interval of time between the instant of the initiation of the arc in a fuse and the instant of final arc extinction in that fuse. —(IEC 60269-1)
Operating Time / Total Clearing Time	Sum of the pre-arcing time and the acting time. —(IEC 60269-1)
Power Dissipation (in a fuse-link)	Power released in a fuse-link carrying a stated value of electric current under prescribed conditions of use and behavior. —(IEC 60269-1)
Correction Factor of Rated Current	When the application environment and working conditions exceed in the conditions specified in the standard, for the purpose of matching the working current and long service life of the fuse, the rating of fuse should be corrected by a correction factor. Consult the fuse manufacturer for specific application recommendations. —(IEC 60269-1)
Cut-off Current	Maximum instantaneous value reached by the current during the breaking operation of a fuse-link when it operates in such a manner as to prevent the current from reaching the otherwise attainable maximum. —(IEC 60269-1)
Cut-off Current Characteristic/ Let-through Current Characteristic	Curve giving the cut-off current as a function of the prospective current under stated conditions of operation. —(IEC 60269-1)

Copyright Belongs to XIAMEN SET Electronics CO. LTD. 2024-2026 V1.1