ATCO

Thermal-Link

- Non-resettable Over Temp. Protection
- High Accuracy of Functioning Temp.
- Sealed Construction
- Low Impedance
- Miniaturized Size
- Rated Current: (1 ~ 200) A
- Rated Functioning Temp.: (76 ~ 230) °C
- Radial and Axial Shapes
- Lead Wires Can Be Insulated

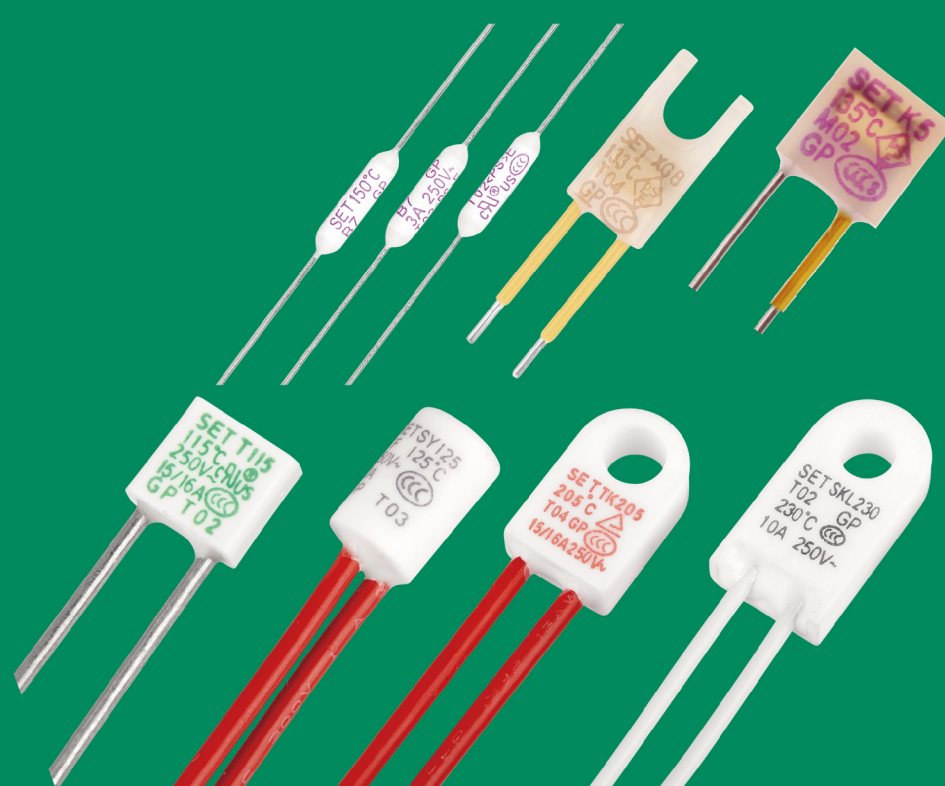

SET safe | SET fuse

Providing a Total Solution for High Standard Safety Circuit Protection

ATCO
Thermal-Link

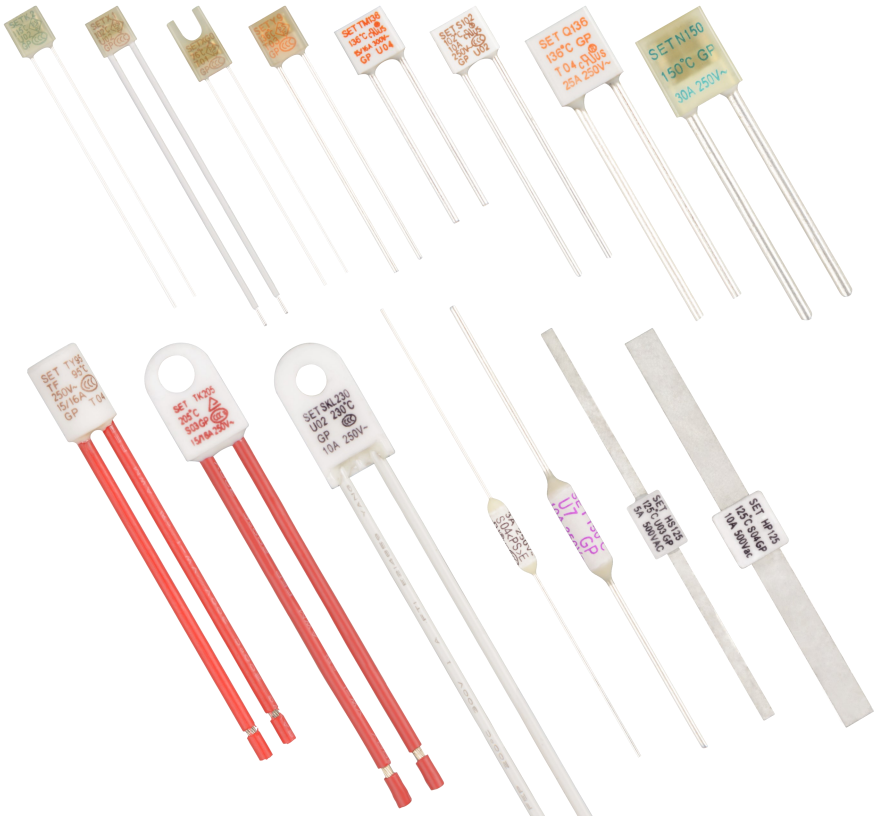

Features

- HIGH ACCURACY OF FUNCTIONING TEMP.
- NON-RESETTABLE OVER TEMP. PROTECTION
- SEALED CONSTRUCTION
- LOW IMPEDANCE
- RATED CURRENT: (1 to 200) A
- RATED FUNCTIONING TEMP.: (76 to 230) °C
- RoHS & REACH COMPLIANT

All Rights Reserved by Xiamen SET Electronics Co., Ltd. 2021-2023 V2.3

ATCO
Thermal-Link

SET safe | SET fuse

ATCO Model Overview

Rated Functioning Temp. T_f (°C) \ Model																										
230	○	○	○	○	○	○	○	○	○	○	○	○	○	○	○	○	○	○	○	SKL230	SE230	○	○	○	○	○
221	V31	H31	B31	C31	U31	R31	○	K31	X31	○	○	○	○	○	○	○	KG31	XG31	SK221	○	○	TK221	○	○	○	○
205	V32	H32	B32	C32	U32	R32	○	K32	X32	○	○	○	○	○	○	○	KG32	XG32	SK205	○	○	TK205	○	○	○	○
200	○	○	○	○	○	○	○	○	○	○	○	○	○	○	○	○	○	○	○	SKL200	SE200	○	○	○	○	○
187	○	○	○	○	○	○	○	K17	X17	○	○	○	○	○	○	○	○	○	○	○	○	○	○	○	○	○
160	V16	H16	B16	C16	U16	R16	F16	K16	X16	Y16	○	○	○	○	○	○	KG16	XG16	SK160	○	○	TK160	○	○	○	○
150	V7	H7	B7	C7	U7	R7	F7	K7	X7	Y7	S150	T150	○	○	N150	G150	KG7	XG7	SK150	○	○	TK150	○	○	KM7	XM7
145	V6	H6	B6	C6	U6	R6	F6	K6	X6	Y6	○	○	○	○	○	○	KG6	XG6	SK145	○	○	TK145	SY145	TY145	○	○
139	V13	H13	B13	C13	○	○	○	○	○	○	○	○	○	○	○	○	○	○	○	○	○	○	○	○	○	○
136	V9	H9	B9	C9	○	○	○	K9	X9	Y9	S136	T136	P136	Q136	N136	G136	KG9	XG9		○	○		○	○	○	○
135	V5	H5	B5	C5	U5	R5	○	K5	X5	○	○	○	○	○	○	○	KG5	XG5	SK135	○	○	TK135	○	○	KM5	XM5
133	V8	H8	B8	C8	○	○	F8	K8	X8	Y8	○	○	○	○	○	○	KG8	XG8	○	○	○	○	○	○	○	○
130	V4	H4	B4	C4	U4	R4	F4	K4	X4	Y4	○	○	○	○	N130	G130	KG4	XG4	SK130	○	○	TK130	SY130	TY130	KM4	XM4
125	V3	H3	B3	C3	U3	R3	F3	K3	X3	Y3	S125	T125	○	○	N125	G125	KG3	XG3	SK125	○	○	TK125	SY125	TY125	○	○
123	○	○	○	○	○	○	○	○	○	○	○	○	○	○	○	○	○	○	○	○	○	○	○	○	○	○
120	○	○	○	○	○	○	○	○	○	○	○	○	○	○	○	○	○	○	○	○	○	○	SY120	TY120	○	○
115	V2	H2	B2	C2	U2	R2	F2	K2	X2	Y2	S115	T115	P115	Q115	N115	G115	KG2	XG2	SK115	○	○	TK115	SY115	TY115	○	○
105	○	○	○	○	○	○	○	○	○	○	○	○	○	○	○	○	○	○	○	○	○	○	SY105	TY105	○	○
102	V1	H1	B1	C1	U1	R1	F1	K1	X1	Y1	S102	T102	○	○	N102	G102	KG1	XG1	SK102	○	○	TK102	○	○	○	○
97	V21	H21	B21	C21	○	○	○	○	○	○	○	○	○	○	○	○	○	○	○	○	○	○	○	○	○	○
95	○	○	○	○	○	○	○	○	○	○	○	○	○	○	○	○	○	○	○	○	○	○	SY95	TY95	○	○
86	V18	H18	B18	C18	U18	R18	F18	K18	X18	Y18	○	○	○	○	○	○	KG18	XG18	○	○	○	○	○	○	○	○
76	V0	H0	B0	C0	U0	R0	F0	K0	X0	Y0	○	○	○	○	○	○	KG0	XG0	○	○	○	○	○	○	○	○
I_r (A) Rated Current	1	2	3	5	10	15	1	2	3	5	10	15 16	20	25	30	40	2	3	10	10	10	15 16	10	15	2	3
U_r (VAC) Rated Voltage	250																								300	
Product Structure	Axial Shape							Radial Shape									Radial Shape (Screw Hole)					Cylindrical			Radial Shape	

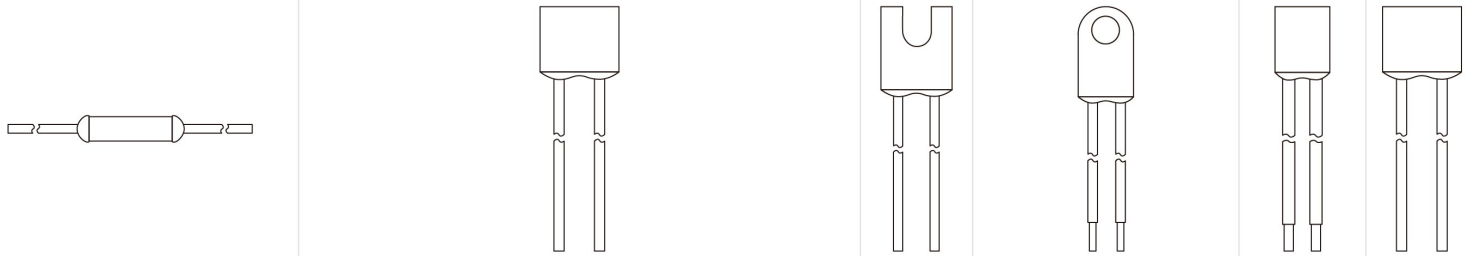

+86-592-571-5838 www.SETfuse.com www.SETsafe.com E-mail : sales@SETfuse.com

All Rights Reserved by Xiamen SET Electronics Co., Ltd. 2021-2023 V2.1

ATCO
Thermal-Link

SET safe | SET fuse

ATCO Model Overview

Rated Functioning Temp. T_f (°C)

Rated Functioning Temp. T_f (°C)	Model																								
230	○	○	○	○	○	○	○	○	○	○	○	○	○	○	○	○	○	○	○	○	○	○	○	○	○
221	○	○	○	○	○	○	○	○	○	○	○	○	○	○	○	○	○	○	○	○	V31	H31	○	B31	○
205	○	○	○	○	○	○	○	○	○	○	○	○	○	○	○	○	○	○	○	○	V32	H32	○	B32	○
200	○	○	○	○	○	○	○	○	○	○	○	○	○	○	○	○	○	○	○	○	○	○	○	○	○
160	○	○	○	○	○	○	○	○	○	○	○	○	○	○	○	○	○	○	○	○	V16	H16	○	B16	○
150	Y7	YM7	SM150	TM150	○	○	○	HU7	HR7	○	○	HC7	○	HL7	HW7	V7	H7	B7	○	C7	○	○	○	○	○
145	○	○	○	○	○	○	○	HU6	HR6	HS145	HP145	HC6	HN145	HL6	HW6	V6	H6	B6	○	C6	○	○	○	○	○
139	○	○	○	○	○	○	○	○	○	○	○	○	○	○	○	V13	H13	B13	○	C13	○	○	○	○	○
136	Y9	YM9	SM136	TM136	Q136	P136	Q136	○	○	HS136	HP136	○	HN136	○	○	V9	H9	B9	○	C9	○	○	○	○	○
135	○	○	○	○	○	○	○	HU5	HR5	○	○	HC5	○	HL5	HW5	V5	H5	B5	○	C5	○	○	○	○	○
133	○	○	○	○	○	○	○	○	○	○	○	○	○	○	○	V8	H8	B8	○	C8	○	○	○	○	SF8
130	Y4	YM4	○	○	○	○	○	HU4	HR4	○	○	○	○	HL4	HW4	V4	H4	B4	○	C4	○	○	○	○	SF4
125	○	○	○	○	○	P125	Q125	HU3	HR3	HS125	HP125	HC3	HN125	HL3	HW3	V3	○	B3	○	C3	○	H3	○	○	○
123	○	○	○	○	○	○	○	○	○	○	○	○	○	○	○	○	○	○	○	○	○	○	○	○	○
120	○	○	○	○	○	○	○	○	○	○	○	○	○	○	○	○	○	○	○	○	○	○	○	○	○
115	○	○	SM115	TM115	Q115	P115	Q115	HU2	HR2	○	○	HC2	○	HL2	HW2	V2	H2	B2	○	C2	○	○	○	○	SF2
105	○	○	○	○	○	○	○	○	○	○	○	○	○	○	○	○	○	○	○	○	○	○	○	○	○
102	○	○	SM102	TM102	○	P102	Q102	HU1	HR1	○	○	HC1	○	HL1	HW1	V1	H1	B1	C1	○	○	○	○	○	○
97	○	○	○	○	○	○	○	○	○	○	○	○	○	○	○	V21	H21	B21	C2	○	○	○	○	○	○
95	○	○	○	○	○	○	○	○	○	○	○	○	○	○	○	○	○	○	○	○	○	○	○	○	○
86	○	○	○	○	○	○	○	HU18	HR18	○	○	HC18	○	HL18	HW18	V18	H18	B18	C18	○	○	○	V18	○	○
76	○	○	○	○	○	○	○	HU0	HR0	○	○	HC0	○	HL0	HW0	V0	H0	B0	C0	○	○	○	○	○	○
I_r (A) Rated Current	5	5	10	15 16	25	20	25	10	15	5	10	5	15	10	15	1	2	3	5	7	1	2	2.5	3	3
U_r (VAC),(VDC) Rated Voltage	300 (VAC)					400 (VAC)		500 (VAC)				690 (VAC)		800 (VAC)		50 (VDC)					60 (VDC)				
Product Structure	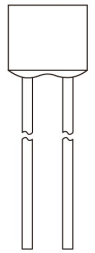 Radial Shape							Axial Shape		Axial Shape (Flat Electrode)		Axial Shape	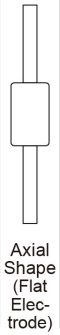 Axial Shape (Flat Electrode)	Axial Shape		Axial Shape								

+86-592-571-5838 www.SETfuse.com www.SETsafe.com E-mail : sales@SETfuse.com

All Rights Reserved by Xiamen SET Electronics Co., Ltd. 2021-2023 V2.1

ATCO
Thermal-Link

ATCO Model Overview

Model

Rated Functioning Temp. T_f (°C)	5	4	5	6	8	8.5	9	10	10	15	2	3	3	2	3	4	20	25	10	15/16	20	25	5	10	15
230	○	○	○	○	○	○	○	○	○	○	○	○	○	○	○	○	○	○	○	○	○	○	○	○	○
221	○	○	C31	○	○	○	○	○	U31	R31	○	○	○	○	○	○	○	○	○	○	○	○	○	○	○
205	○	○	C32	○	○	○	○	○	U32	R32	○	○	○	○	○	○	○	○	○	○	○	○	○	○	○
200	○	○	○	○	○	○	○	○	○	○	○	○	○	○	○	○	○	○	○	○	○	○	○	○	○
160	○	○	C16	○	○	○	○	○	U16	R16	○	○	○	○	○	○	○	○	○	○	○	○	○	○	○
150	○	○	○	○	○	○	○	○	U7	R7	○	○	○	○	○	○	○	○	SD150	TD150	PD150	QD150	HS150	HP150	HN150
145	○	○	○	○	○	○	○	C6	U6	R6	X6	F6	○	○	○	○	○	○	○	○	○	○	○	○	○
139	SF13	V13	○	○	C13	M13	○	○	○	○	○	F13	○	○	○	○	○	○	○	○	○	○	○	○	○
136	○	○	○	○	○	○	○	○	○	○	X9	○	○	○	○	○	P136	Q136	SD136	TD136	PD136	QD136	HS136	HP136	HN136
135	○	○	○	○	○	○	○	○	U5	R5	○	○	○	○	○	○	○	○	○	○	○	○	○	○	○
133	○	V8	○	○	○	○	○	○	○	○	○	F8	○	○	○	○	○	○	○	○	○	○	○	○	○
130	○	V4	○	○	○	○	○	○	U4	R4	○	F4	○	○	○	○	○	○	SD130	TD130	PD130	QD130	○	○	○
125	○	○	○	○	○	○	○	○	U3	R3	X3	○	○	KG3	XG3	K3	P125	Q125	SD125	TD125	PD125	QD125	HS125	HP125	HN125
123	○	○	○	○	○	○	○	○	○	○	○	○	○	○	○	○	○	○	○	○	○	○	○	○	○
120	○	○	○	○	○	○	○	○	○	○	○	○	○	○	○	○	○	○	○	○	○	○	○	○	○
115	○	V2	○	○	C2	○	○	○	U2	R2	X2	F2	○	KG2	XG2	K2	P115	Q115	SD115	TD115	PD115	QD115	○	○	○
105	○	○	○	○	○	○	○	○	○	○	○	○	○	○	○	○	○	○	○	○	○	○	○	○	○
102	○	○	○	○	○	○	○	○	U1	R1	X1	F1	○	KG1	XG1	K1	P102	Q102	SD102	TD102	PD102	QD102	○	○	○
97	○	○	○	○	○	○	○	○	○	○	○	○	○	○	○	○	○	○	○	○	○	○	○	○	○
95	○	○	○	○	○	○	○	○	○	○	○	○	○	○	○	○	○	○	○	○	○	○	○	○	○
86	○	○	○	C18	○	○	○	○	U18	R18	X18	F18	○	KG18	XG18	K18	○	○	○	○	○	○	○	○	○
76	○	○	○	○	○	○	○	○	U0	R0	○	○	○	○	○	○	○	○	○	○	○	○	○	○	○
I_r (A) Rated Current									60								120				125				200
U_r (VDC) Rated Voltage																									
Product Structure																	Radial Shape (Screw Hole)				Radial Shape				Axial Shape (Flat Electrode)

ATCO
Thermal-Link

Description

Alloy Thermal-Link / Alloy Thermal Cutoff (ATCO) is defined as a non-resettable protective device functioning one time only. It is widely used in electrical equipment. ATCO is mainly consist of Fusible Alloy, Flux Resin, Case, Sealant and Lead Wires. Normall y, Fusible Alloy is jointed to the two Lead Wires. Under abnormal conditions, when the Temp. reaches to the fusing Temp. of AT CO, the Fusible Alloy melts and quickly retracts to the two Lead Wire ends with the aid of the Flux Resin and disconnects the cir cuit completely. SETsafe | SETfuse ATCO is classified into Axial and Radial shapes, with Rated Current 1 A to 200 A, Rated Fu nctioning Temp. 76 °C to 230 °C, with CCC, UL, cUL, VDE, TUV, KC, PSE, Approvals and RoHS, REACH compliant.

Structure

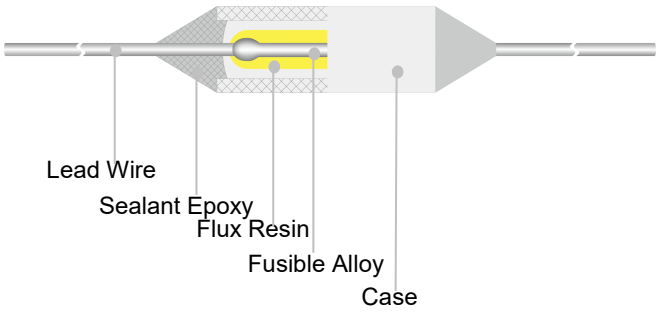

Axial Shape

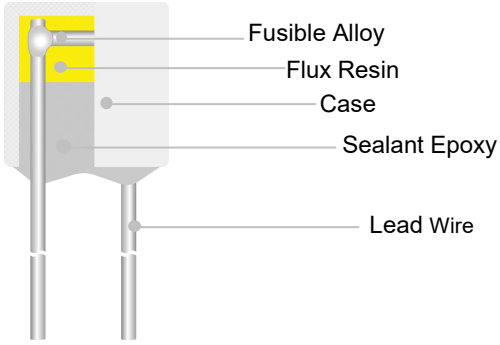

Radial Shape

Marking

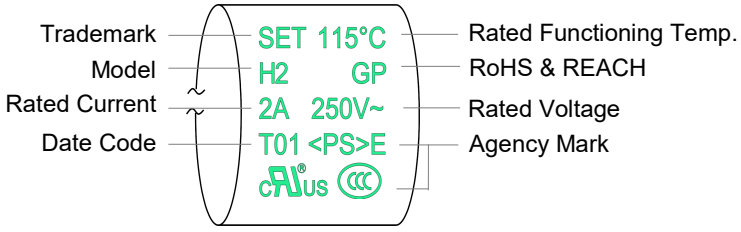

Axial Shape (The color is for reference only)

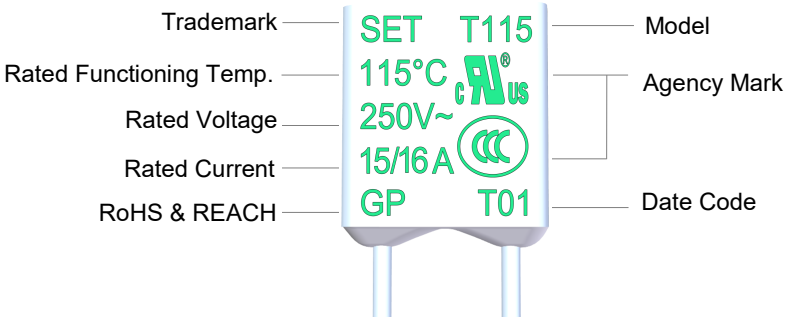

Radial Shape (The color is for reference only)

All Rights Reserved by Xiamen SET Electronics Co., Ltd. 2021-2023 V2.3

Part Number System

ATCO - T 115 - A N N A B - 001

Serial Number

Packing

- B Bulk
- T Taping

Leads Forming

- A Straight Lead
- B Single Lead Bending
- C Leads Bending
- D Leads Kinking
- E Leads Bending

Color of Insulation Tube

- W White
- Y Yellow
- R Red
- K Black
- N None

Insulation Tube Material

- T Teflon
- P Polyester
- N None

Lead Wire Type

- A Tinned Copper Wire
- B Tinned Copper Clad Steel Wire

Rated Functioning Temp.

- 115 115 °C, Refer to specifications

Series

- T Series, Refer to specifications

Product Category

- ATCO Thermal-Link

All Rights Reserved by Xiamen SET Electronics Co., Ltd. 2021-2023 V2.3

Leads Forming Types

The below leads forming are for reference only, more leads forming can be customized.

Axial

Type A	Type B	Type C
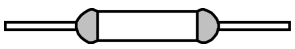	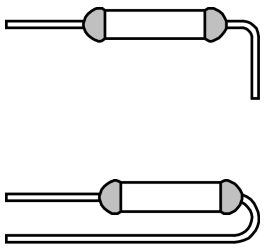	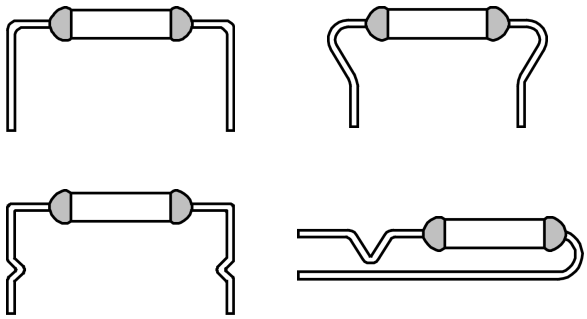

Radial

Type A	Type B	Type C	Type D	Type E
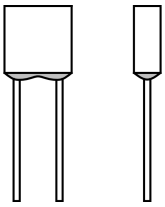	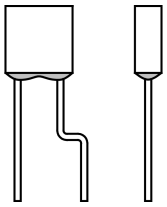	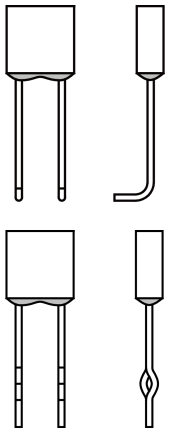	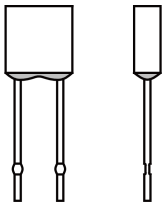	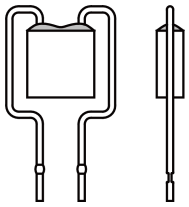

Glossary

Item	Description
TCO	**Thermal-Link** A non-resettable device incorporating a THERMAL ELEMENT which will open a circuit once only when exposed for a sufficient length of time to a temperature in excess of that for which it has been designed. — (IEC 60691)

All Rights Reserved by Xiamen SET Electronics Co., Ltd. 2021-2023 V2.3

ATCO
Thermal-Link

ATCO	**Alloy Thermal-Link** Alloy Type Thermal-Link, Alloy is the thermal element.
T_f	**Rated Functioning Temp.** The temperature of the Alloy Thermal-Link which causes it to change the state of conductivity with a detection current up to 10 mA as the only load. — (IEC 60691) Tolerance: T_f + 0 / - 10 °C (GB 9816.1, EN 60691, K60691). Tolerance: T_f ± 7 °C (J60691).
Fusing Temp.	**Fusing Temp.** The temperature of the Alloy Thermal-Link which causes it to change its state of conductivity is measured with silicone oil bath in which the temperature is increased at the rate of 0.5 °C to 1 °C / minute, with a detection current up to 10 mA as the only load. — (IEC 60691)
T_h	**Holding Temp.** The maximum temperature at which a Alloy Thermal-Link will not change its state of conductivity when conducting rated current for 168 hours. — (IEC 60691)
T_m	**Maximum Temp. Limit** The temperature of the Alloy Thermal-Link stated by the manufacturer, up to which the mechanical and electrical properties of the Alloy Thermal-Link having changed its state of conductivity, will not be impaired for a given time. — (IEC 60691)
I_r	**Rated Current** The current used to classify a Alloy Thermal-Link, which is the maximum current that Alloy Thermal-Link allows to carry and is able to cut off the circuit safely. — (IEC 60691)
U_r	**Rated Voltage** The voltage used to classify a Alloy Thermal-Link, which is the maximum voltage that Alloy Thermal-Link allows to carry and is able to cut off the circuit safely. — (IEC 60691)
I_n	**Nominal Discharge Current** Being able to withstand 15 peak currents of waveform 8 /20 μs to test the product's durability of withstanding pulse current. — (UL 1449)
I_{max}	**Maximum Discharge Current** Being able to withstand 1 peak current of waveform 8 / 20 μs to test maximum pulse current that the product can withstand. — (UL 1449)

ATCO

All Rights Reserved by Xiamen SET Electronics Co., Ltd. 2021-2023 V2.3

ATTENTION

Usage

1. When atmosphere pressure is from 80 kPa to 106 kPa, the related altitude shall be from 2000 meter to -500 meter.
2. Operating voltage should be less than rated voltage of ATCO, operating current should be less than rated current of ATCO.
3. Do not touch the ATCO body or lead wires directly when power is on, to avoid burning or electric shock.

Replacement

ATCO is a non-repairable product. For safety sake, it shall be replaced by an equivalent ATCO from the same manufacturer, and mounted in the same way.

Storage

Do not store the ATCO at the high Temp., high humidity or corrosive gas environment, avoid influencing the solder-ability of the lead wires, the product shall be used up within 1 year after receiving the goods.

Installation

Make Sure the Temp. of Installation Position.

1. It is recommended that a dummy ATCO with inbuilt thermo-couple shall be used to determine the proper Temp.
2. The terminal product should be tested to ensure that potential abnormal conditions do not cause ambient Temp. to exceed the T_m of the ATCO.
3. Mount the ATCO at the location where Temp. rises evenly.
4. The surface Temp. of TCO less than the holding temp of ATCO.
5. The seal or body of TCO must not be burned or over heated.

All Rights Reserved by Xiamen SET Electronics Co., Ltd. 2021-2023 V2.3

Installation position of mechanical performance requirements.

1. Do not locate the ATCO in a place where severe vibration always occurs.
2. Ensure that the lead wire is long enough, and avoid actions such as press, tensile or twist.
3. The seal or body of TCO must not be damaged.

Mechanical Connection

Riveting

1. Choose small resistivity riveting material and be riveted.
2. A flexible lead or lead with low resistance should be used to rivet the ATCO.
3. Contact resistance should be minimal, large contact resistance will lead to higher Temp.rising, ATCO Functioning in advance.

Crimping

1. Choose small resistivity crimping material and be riveted.
2. Crimping process, to ensure that the lead will not be reversed, sealing resin will not be destroyed.
3. Contact resistance should be minimal, large contact resistance will lead to higher Temp., ATCO Functioning in advance.

Soldering

Hand-Soldering

1. Soldering should be carried out according to Table T-1.
2. The thermal element of ATCO is fusible alloy with low melting point, which is jointed with ATCO lead wires. Improper soldering operation (too high soldering Temp. , too long soldering time, too short lead wire etc.) may transfer more heat to the thermal element and ATCO may open in advance.
3. When soldering conditions are more severe than those listed in Table T-1, a heat sink fixture should be used between soldering point and ATCO body.
4. When soldering, please do not pull / push or twist ATCO body or lead wires.
5. After soldering, let it naturally cool for more than 20 seconds. During cooling, donot move the ATCO body or lead wires.

Wave Soldering

The wave soldering parameters as Table T-2, for reference only, when ATCO is for practice use, you need to do some

Rated Functioning Temp. (T_f)	Max. Allowable Soldering Time for Different Lead Wire Length (Fig.H-1)									Max. Soldering Temp.
	L_s Length	Time		L_s Length	Time		L_s Length	Time		
		Tinned Copper Wire	CP Wire		Tinned Copper Wire	CP Wire		Tinned Copper Wire	CP Wire	
(°C)	(mm)	(s)	(s)	(mm)	(s)	(s)	(mm)	(s)	(s)	(°C)
76 to 101	10	1[a]	4	20	2	5	30	3	6	400
102 to 115	10	1[a]	4	20	2	5	30	3	6	
116 to 135	10	1[a]	4	20	3	6	30	5	8	
136 to 150	10	3	6	20	5	8	30	5	8	
151 to 230	10	4	7	20	6	9	30	7	10	

All Rights Reserved by Xiamen SET Electronics Co., Ltd. 2021-2023 V2.3

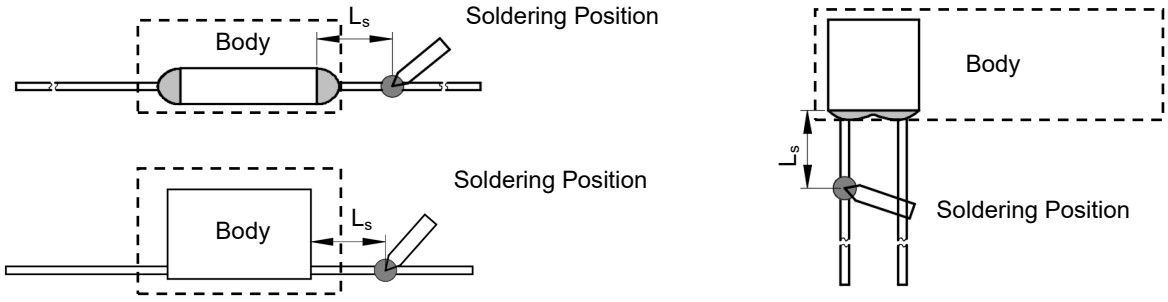

FIGURE T-1

TABLE T-2 Wave Soldering Parameters Setting

Rated Functioning Temp. (T_f)	Max. Allowable Preheating Temp. When the Length of Lead Wire is Different(Fig.T-1)				Preheating Time (t_1)	Max. Wave Soldering Temp.	Dwelling Time (t_2)	Cooling Time (t_3)
	L_s Length	Preheating Temp.	L_s Length	Preheating Temp.				
(°C)	(mm)	(°C)	(mm)	(°C)	(s)	(°C)	(s)	(s)
76 to 130	Recommend Hand-Soldering							
131 to 150	20	80	30	90	< 60	≤ 260	≤ 3	≤ 10
151 to 230	20	90	30	100	< 60	≤ 260	≤ 3	≤ 10

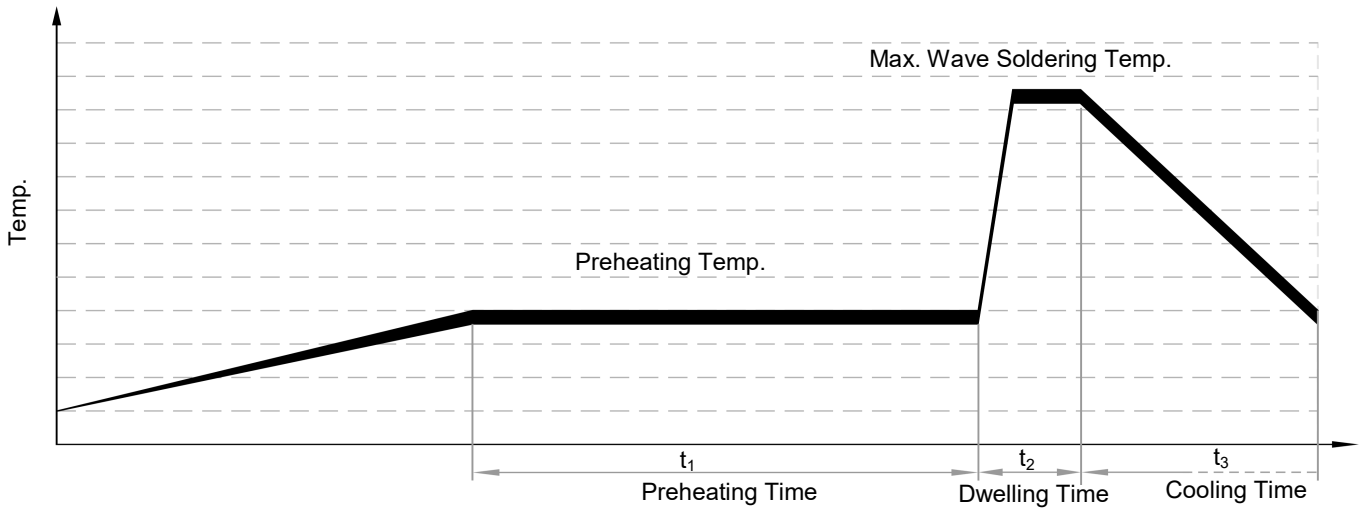

All Rights Reserved by Xiamen SET Electronics Co., Ltd. 2021-2023 V2.3

Lead Wire Forming

1. If lead wire has to be bent, please pay attention to the distance between body and bending point. Refer to Table T-3, T-4.
2. When bending leads, please use pincher or similar tools to fix the product as shown in Fig.T-2, T-3, to avoid damaging the product.
3. During forming and mounting, lead wire should not be cut, nicked, bent sharply, to avoid breaking the product.
4. Tangential forces on the leads must be avoided (i.e. pushing or pulling on the leads at angle to ATCO body) as such forces may damage the seal of ATCO.

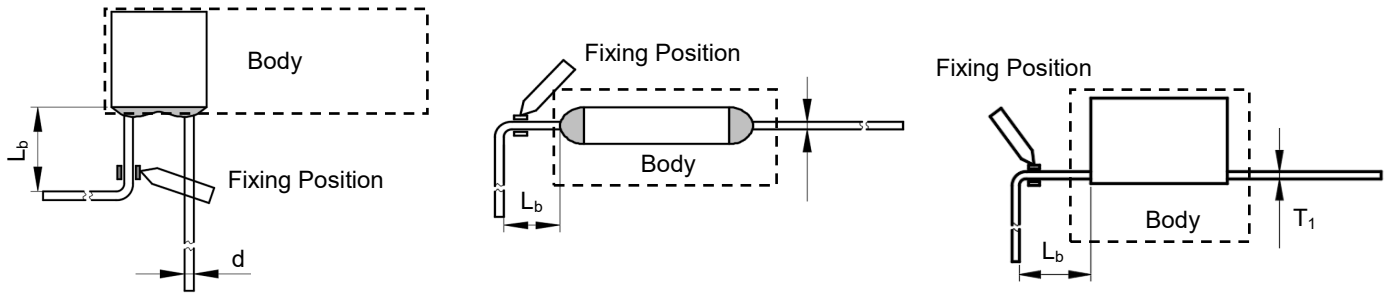

FIGURE T-2

TABLE T-3 Distance between Body and Bending Point

Round Lead Wire	d	(mm)	< 1.0	1.0 - 1.2	> 1.2
	L_b	(mm)	≥ 3	≥ 5	≥ 10

TABLE T-4 Distance between Body and Bending Point

Flat Electrode Chamber	T_1	(mm)	≤ 0.25	0.25 - 0.5	> 0.5
	L_b	(mm)	≥ 3	≥ 5	≥ 10

All Rights Reserved by Xiamen SET Electronics Co., Ltd. 2021-2023 V2.3

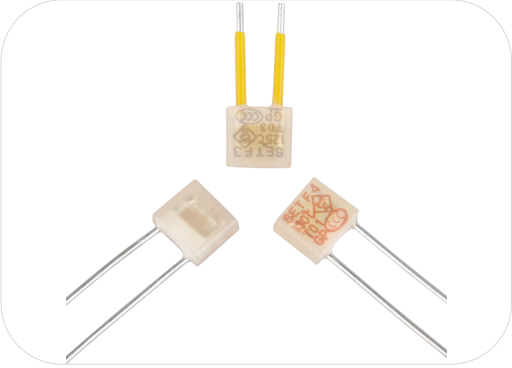

Applications

- Lamps
- Switched-Mode Power Supplies
- Home Electrical Appliances
- Transformers
- Motors
- Batteries

Features

- High Accuracy of Functioning Temp.
- Non-Resettable
- RoHS & REACH Compliant

Customization

- Temp.
- The Length of Lead Wires
- Taping Packing Available
- Lead Wires can be Insulated
- Tinned Copper Wires or CP Wires

Agency Approvals

Agency Mark	Standards	No.
	UL 60691	E214712
	CAN-CSA-E60691	E214712
	EN 60691	R50161758
	EN 60691	40004041
	J60691	PSE16021063、PSE16021064 PSE16021065、PSE16021066 PSE16021067、PSE16021068
	K60691	SU05023-6002A、SU05023-6003B
	GB 9816.1	2020980205000190

Dimensions (mm)

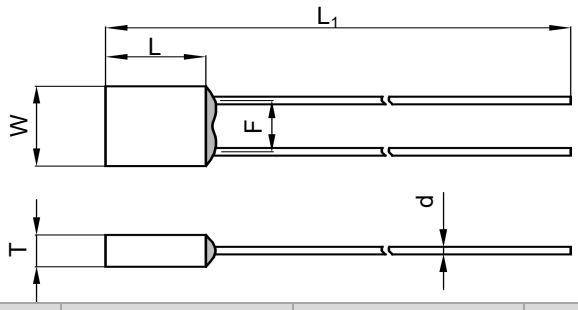

L	L_1	W	T	d	F
4.2 ± 0.5	70.0 ± 3.0	5.1 ± 0.5	2.3 ± 0.2	0.50 ± 0.05	3.2 ± 0.5

All Rights Reserved by Xiamen SET Electronics Co., Ltd. 2021-2023 V2.3

Specifications

Model	T_f	Fusing Temp.	T_h	T_m	I_r	U_r	UL	cUL	TUV	VDE	PSE	KC	CCC	RoHS REACH
	(°C)	(°C)	(°C)	(°C)	(A)	(V)								
F0	76	73 ± 2	53	200	1	AC 250	●	●	●	○	●	○	●	●
F18	86	81 ± 2	61	200	1	AC 250	●	●	●	○	●	○	●	●
			50		3	DC 60	●	●	●	○	○	○	○	●
F1	102	98 ± 2	79	200	1	AC 250	●	●	●	●	●	●	●	●
			60		3	DC 60	●	●	●	○	○	○	○	●
F2	115	111 ± 2	91	200	1	AC 250	●	●	●	●	●	●	●	●
			80		3	DC 60	●	●	●	○	○	○	○	●
F3	125	121 ± 2	100	200	1	AC 250	●	●	●	●	●	●	●	●
F4	130	125 ± 2	106	200	1	AC 250	●	●	●	●	●	●	●	●
			90		3	DC 60	●	●	●	○	○	○	○	●
F8	133	130 ± 2	111	200	1	AC 250	●	●	●	●	●	●	●	●
			90		3	DC 60	●	●	●	○	○	○	○	●
F13	139	135 ± 2	113	200	1	AC 250	●	●	●	○	●	○	○	●
					3	DC 60	●	●	●	○	○	○	○	●
F6	145	140 ± 2	121	200	1	AC 250	●	●	●	○	●	○	○	●
			115		3	DC 60	●	●	●	○	○	○	○	●
F7	150	145 ± 2	126	200	1	AC 250	●	●	●	●	●	●	●	●
F16	160	154 ± 2	135	200	1	AC 250	○	○	○	○	●	○	●	●

Note:

"● "Means certificated.

"○ "Means non-certificated.

All Rights Reserved by Xiamen SET Electronics Co., Ltd. 2021-2023 V2.3

Packaging Information

Bulk

Item	PE Bag	PE Bag	Carton
Dimensions (mm)	135 × 85	190 × 180	440 × 300 × 260
Quantity (PCS)	100	1000	50000
Gross Weight (kg)			17.0± 10%

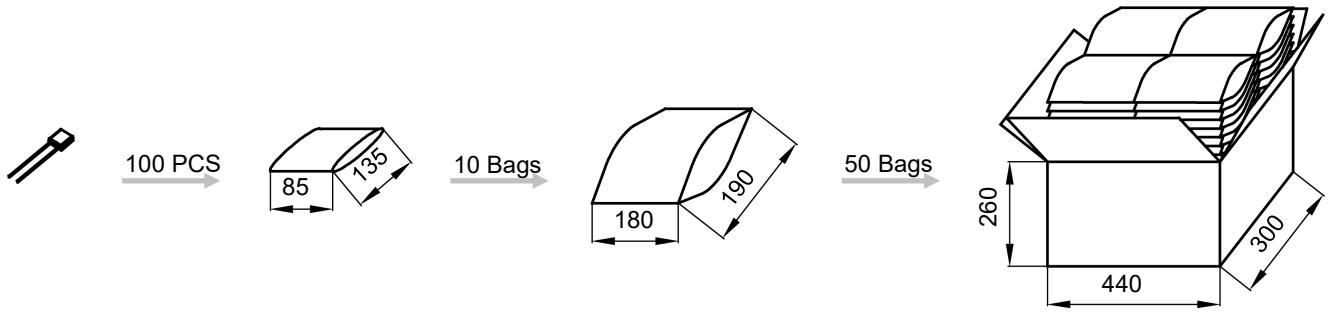

Taping

Item	Box	Carton
Dimensions (mm)	328 × 200 × 70	480 × 340 × 220
Quantity (PCS)	2000	12000
Gross Weight (kg)		5.6 ± 10%

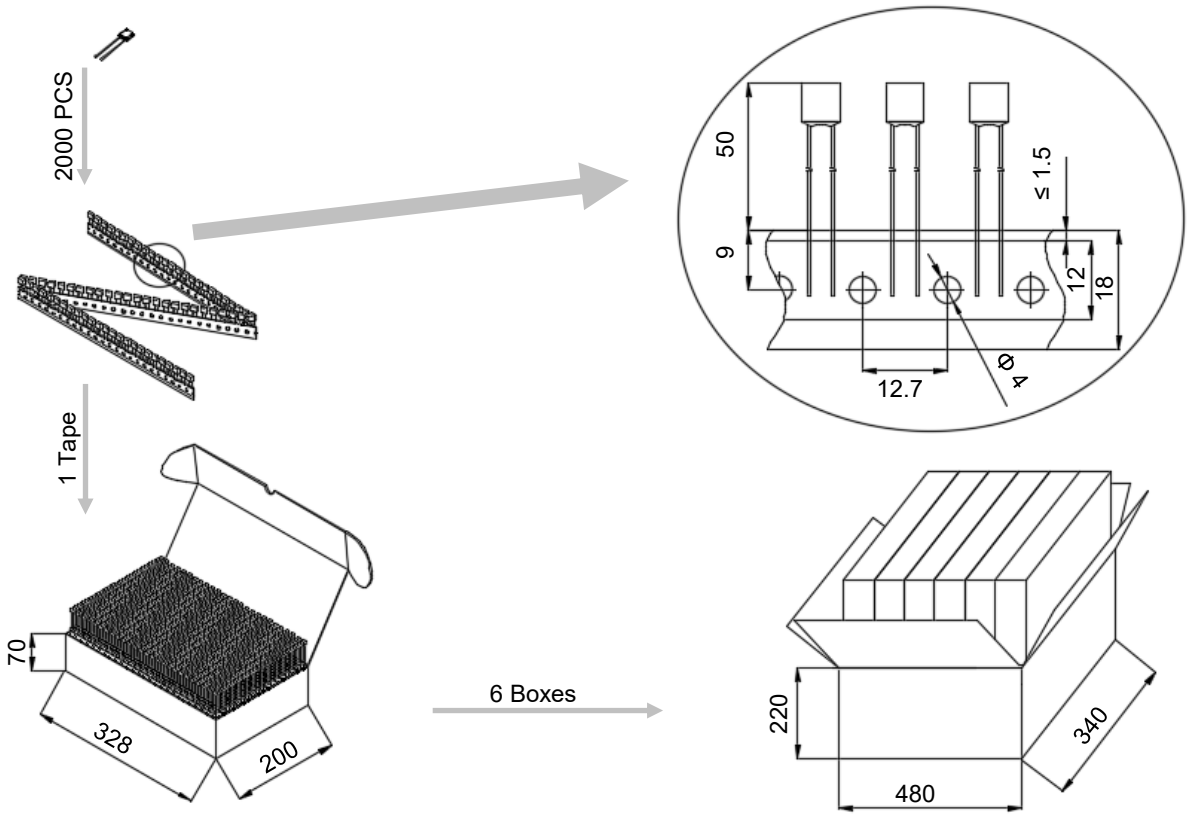

All Rights Reserved by Xiamen SET Electronics Co., Ltd. 2021-2023 V2.3

Product Temp.-Time Curve (For Reference Only)

The Temp.-Time Curve of Thermal-Link in different Temp. oil baths.

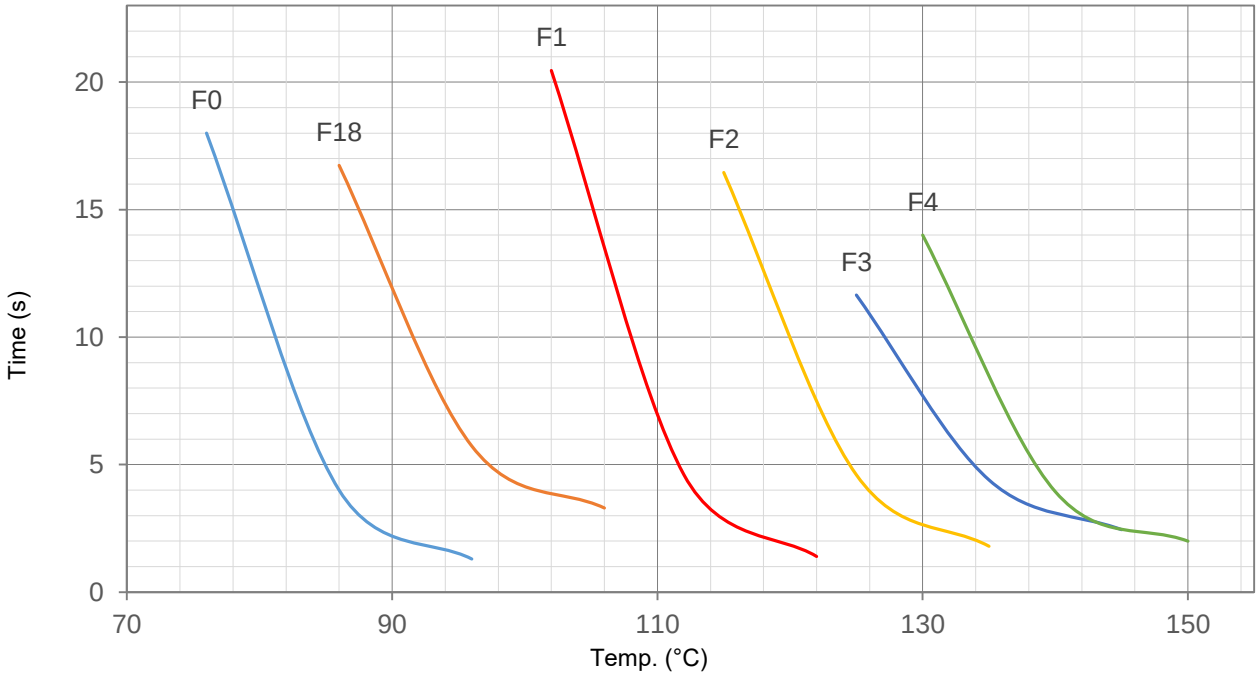

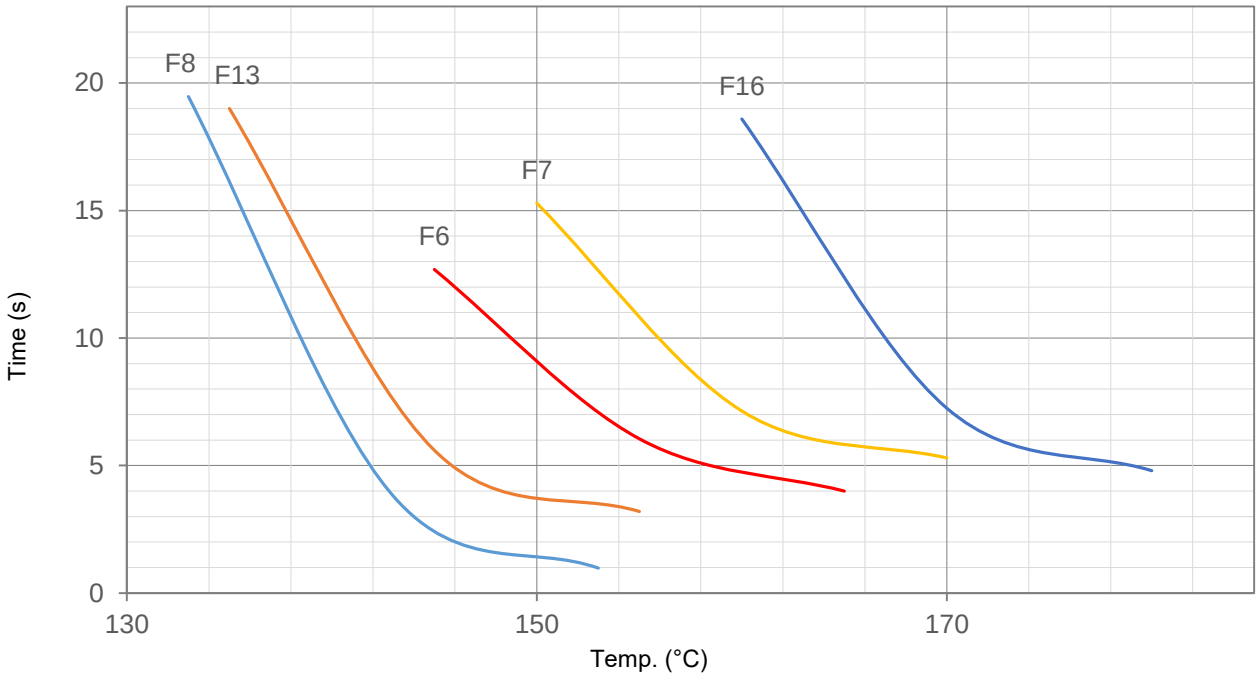

All Rights Reserved by Xiamen SET Electronics Co., Ltd. 2021-2023 V2.3

Product Current-Time Curve (For Reference Only)

The Current-Time Curve shows functioning time at multi-times rated current at room temperature 25 ± 2 °C.

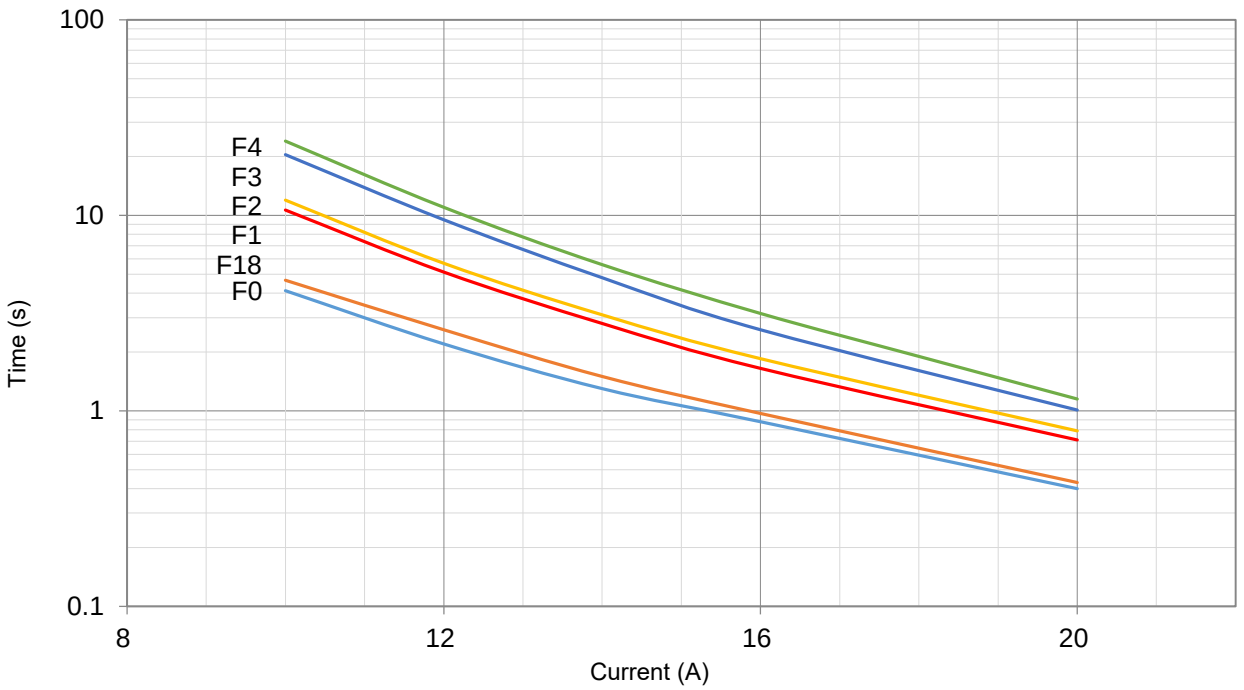

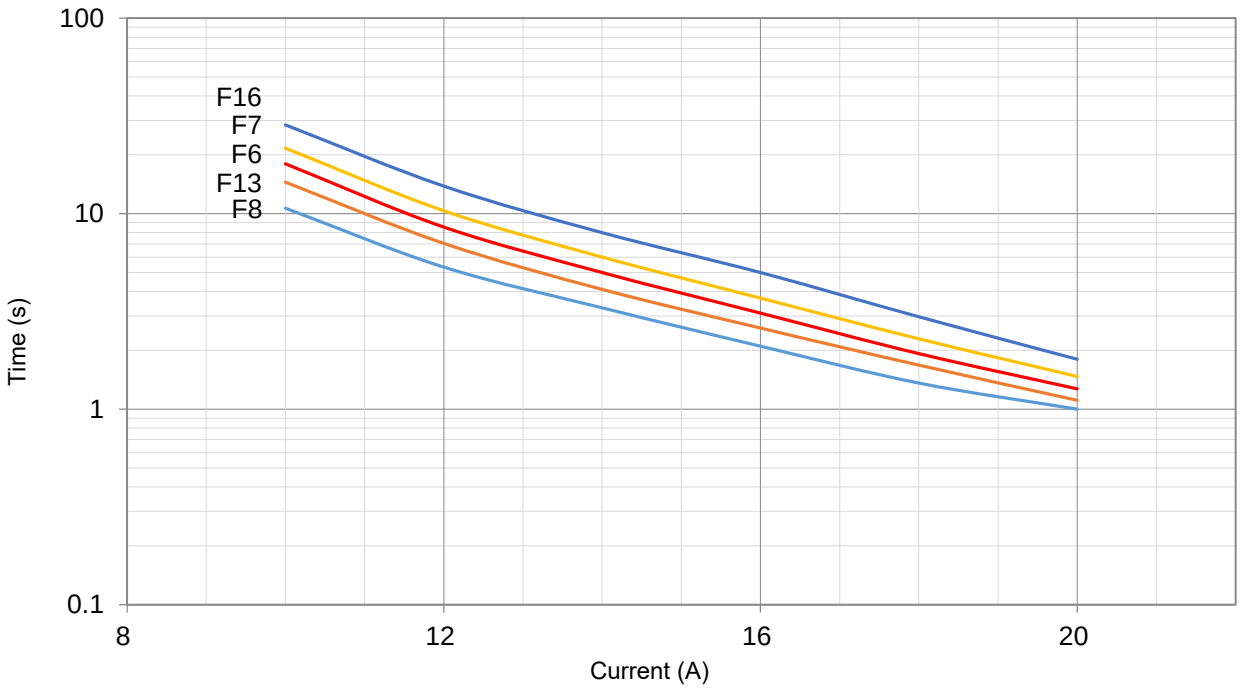

All Rights Reserved by Xiamen SET Electronics Co., Ltd. 2021-2023 V2.3

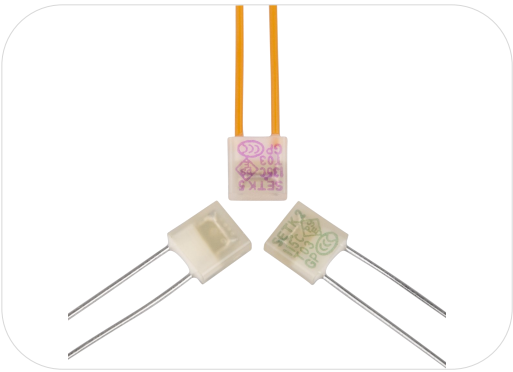

Applications

- Lamps
- Switched-Mode Power Supplies
- Home Electrical Appliances
- Transformers
- Motors
- Batteries

Features

- High Accuracy of Functioning Temp.
- Non-Resettable
- RoHS & REACH Compliant

Customization

- Temp.
- The Length of Lead Wires
- Taping Packing Available
- Lead Wires can be Insulated
- Tinned Copper Wires or CP Wires

ATCO

Agency Approvals

Agency Mark	Standards	No.
	UL 60691	E214712
	CAN-CSA-E60691	E214712
	EN 60691	R50161772、R50161779
	EN 60691	40017055
	J60691	PSE16021063、PSE16021064 PSE16021065、PSE16021066 PSE16021067、PSE16021068
	K60691	SU05023-6001A、SU05023-6002A SU05023-6003B
	GB 9816.1	2020980205000195

Dimensions (mm)

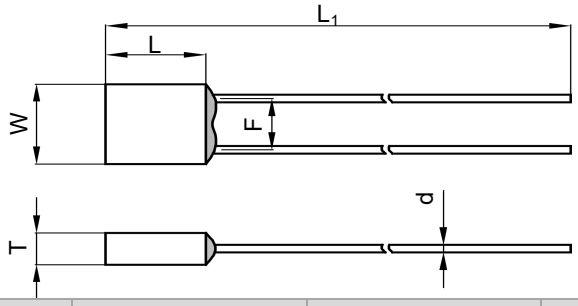

L	L_1	W	T	d	F
5.8 ± 0.5	70.0 ± 3.0	5.8 ± 0.5	2.3 ± 0.2	0.54 ± 0.05	3.7 ± 0.5

All Rights Reserved by Xiamen SET Electronics Co., Ltd. 2021-2023 V2.3

Specifications

Model	T_f	Fusing Temp.	T_h	T_m	I_r	U_r	UL	cUL	TUV	VDE	PSE	KC	CCC	RoHS REACH
	(°C)	(°C)	(°C)	(°C)	(A)	(V)								
K0	76	73 ± 2	53	200	2	AC 250	●	●	●	○	●	○	●	●
K18	86	81 ± 2	61	200	2	AC 250	●	●	○	●	●	●	●	●
						DC 60	●	●	○	○	○	○	○	●
K1	102	98 ± 2	79	200	2	AC 250	●	●	●	●	●	●	●	●
						DC 60	●	●	○	○	○	○	○	●
K2	115	111 ± 2	91	200	2	AC 250	●	●	●	●	●	●	●	●
						DC 60	●	●	○	○	○	○	○	●
K3	125	121 ± 2	100	200	2	AC 250	●	●	●	●	●	●	●	●
						DC 60	●	●	○	○	○	○	○	●
K4	130	125 ± 2	106	200	2	AC 250	●	●	●	●	●	●	●	●
K8	133	130 ± 2	111	200	2	AC 250	●	●	○	●	●	●	●	●
K5	135	130 ± 2	111	200	2	AC 250	●	●	○	●	●	●	●	●
K9	136	131 ± 2	112	200	2	AC 250	●	●	●	●	●	●	●	●
			85		4	DC 60	●	●	●	○	○	○	○	●
K6	145	140 ± 2	121	200	2	AC 250	●	●	●	●	●	●	●	●
			100		4	DC 60	●	●	●	○	○	○	○	●
K7	150	145 ± 2	126	200	2	AC 250	●	●	●	●	●	●	●	●
K16	160	154 ± 2	135	200	2	AC 250	○	○	○	○	●	○	●	●
K17	187	182 ± 3	162	250	2	AC 250	○	○	●	○	●	○	○	●
K32	205	199 ± 3	169	250	2	AC 250	●	●	●	○	○	○	●	●
K31	221	218 ± 2	188	250	2	AC 250	●	●	●	○	○	○	●	●

Note:

"● "Means certificated.

"○ "Means non-certificated.

All Rights Reserved by Xiamen SET Electronics Co., Ltd. 2021-2023 V2.3

Packaging Information

Bulk

Item	PE Bag	PE Bag	Carton
Dimensions (mm)	135 × 85	190 × 180	440 × 300 × 260
Quantity (PCS)	100	1000	50000
Gross Weight (kg)			20.0± 10%

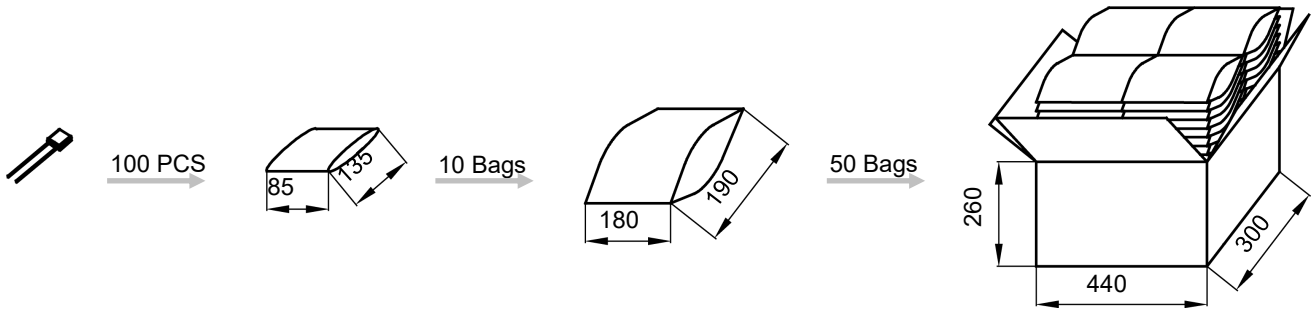

Taping

Item	Box	Carton
Dimensions (mm)	328 × 200 × 70	480 × 340 × 220
Quantity (PCS)	2000	12000
Gross Weight (kg)		6.0 ± 10%

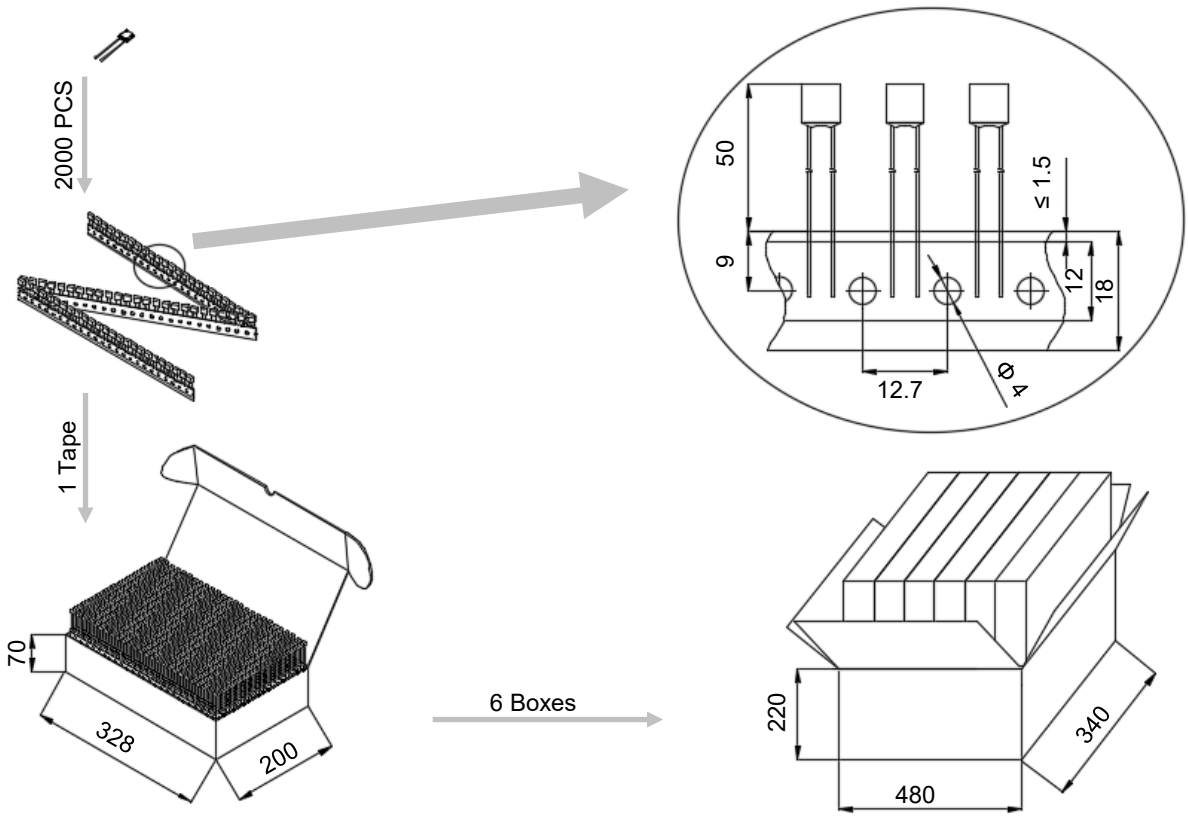

All Rights Reserved by Xiamen SET Electronics Co., Ltd. 2021-2023 V2.3

Product Temp.-Time Curve (For Reference Only)

The Temp.-Time Curve of Thermal-Link in different Temp. oil baths.

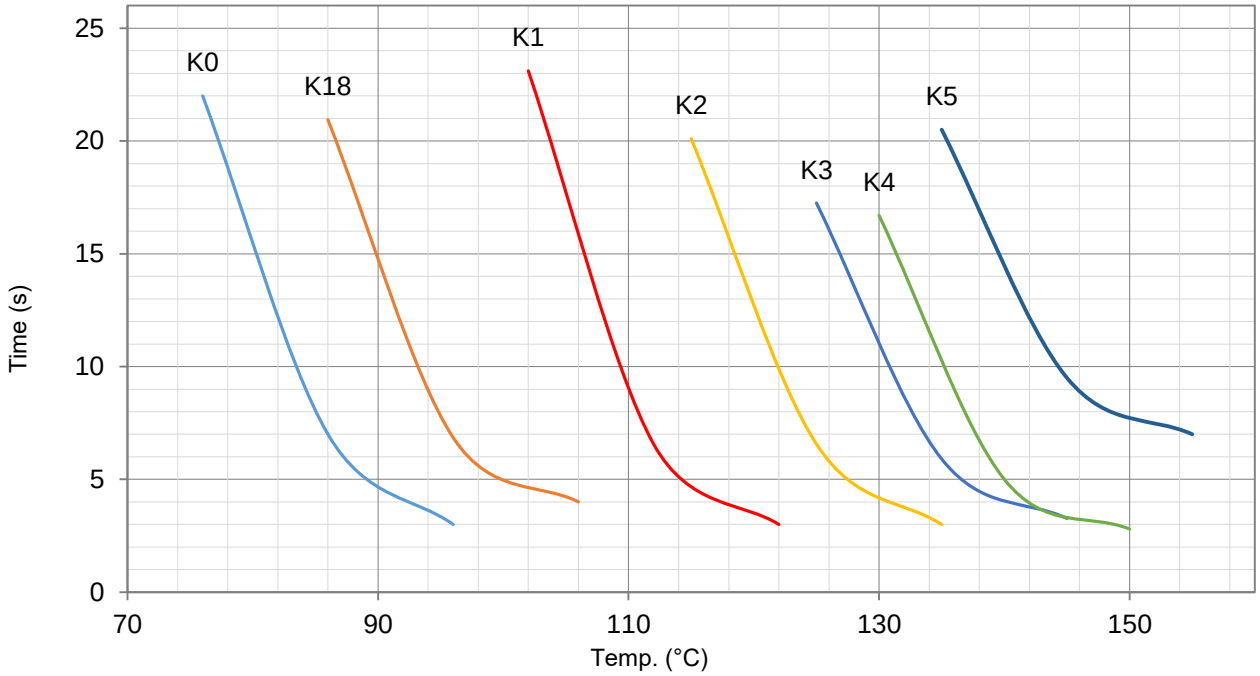

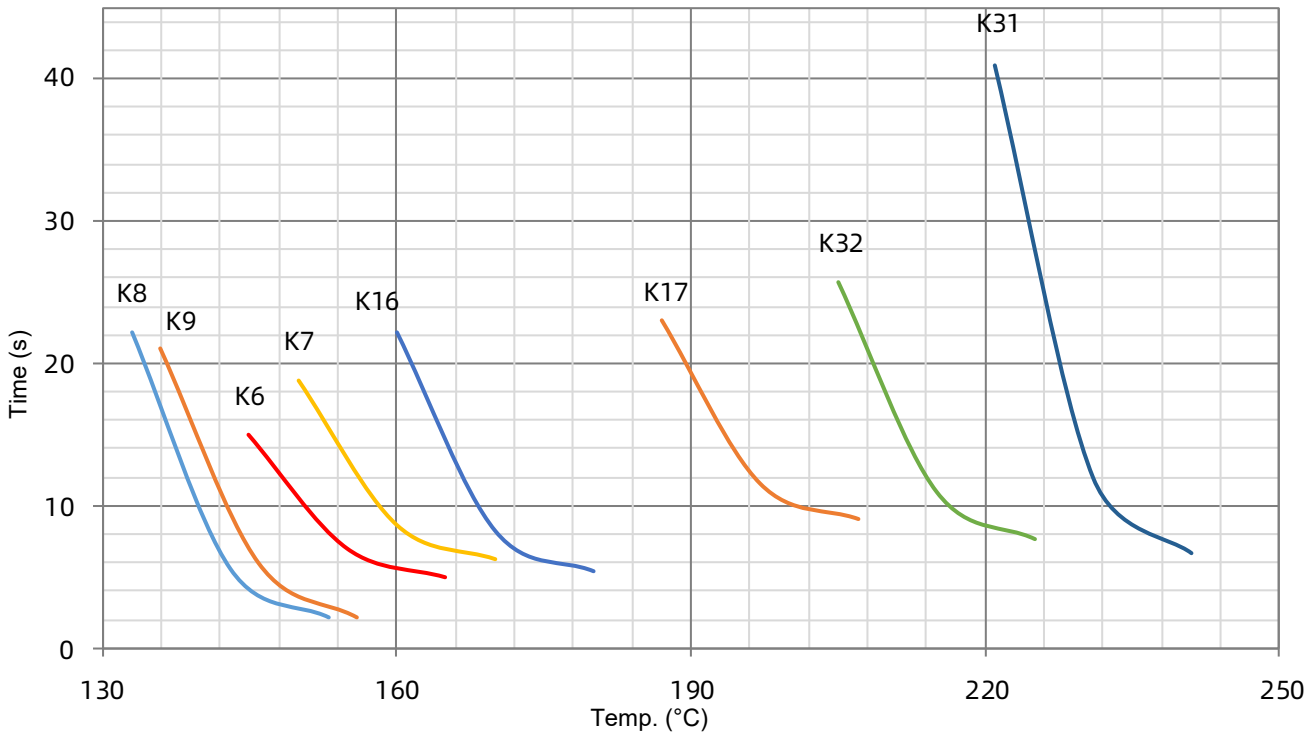

All Rights Reserved by Xiamen SET Electronics Co., Ltd. 2021-2023 V2.3

Product Current-Time Curve (For Reference Only)

The Current-Time Curve shows functioning time at multi-times rated current at room temperature 25 ± 2 °C.

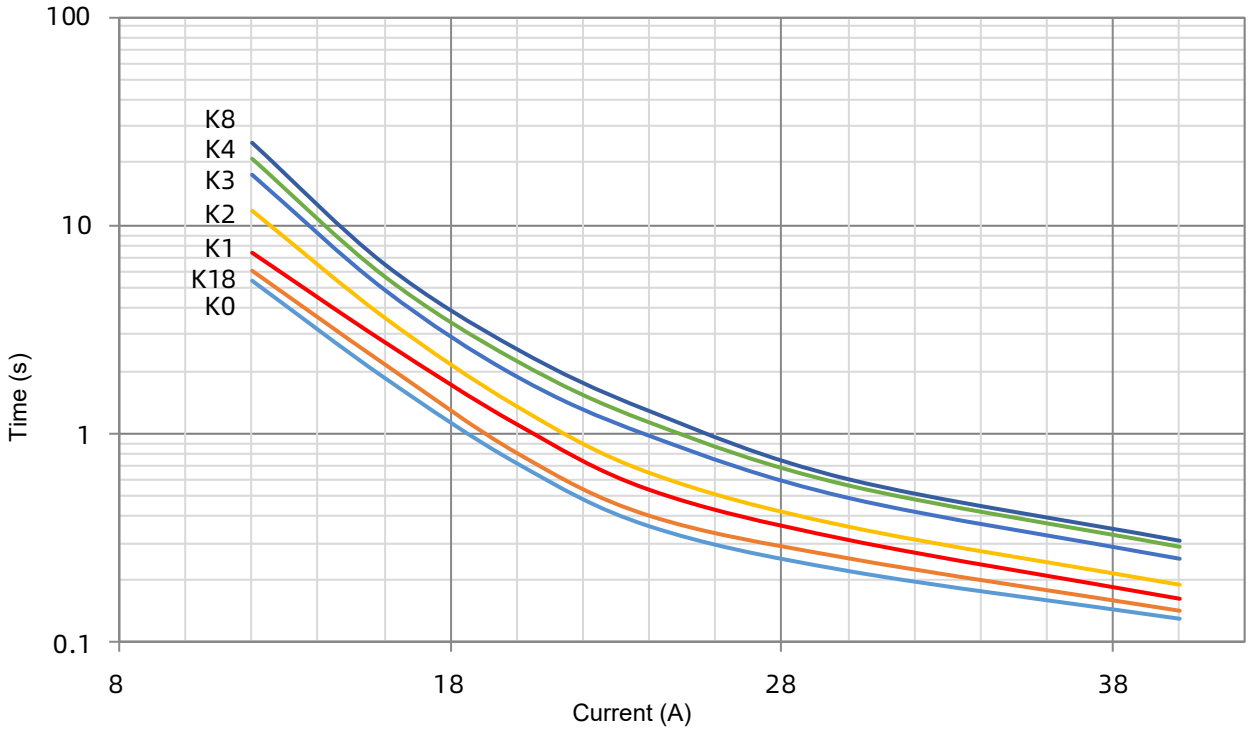

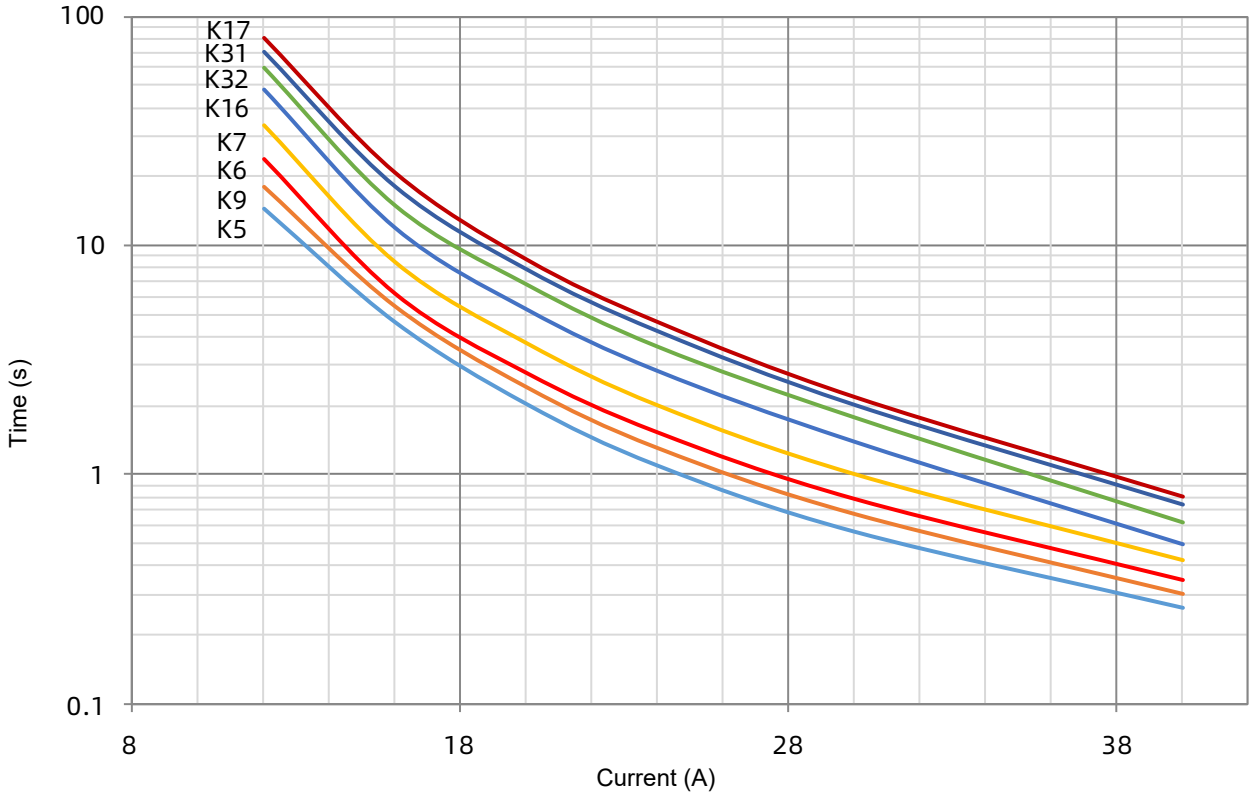

All Rights Reserved by Xiamen SET Electronics Co., Ltd. 2021-2023 V2.3

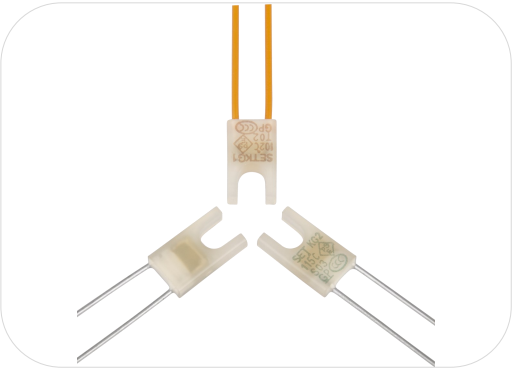

Applications

- Lamps
- Switched-Mode Power Supplies
- Home Electrical Appliances
- Batteries

Features

- High Accuracy of Functioning Temp.
- Non-Resettable
- Make a Mounting Hole
- RoHS & REACH Compliant

Customization

- Temp.
- The Length of Lead Wires
- Taping Packing Available
- Lead Wires can be Insulated
- Tinned Copper Wires or CP Wires

Agency Approvals

Agency Mark	Standards	No.
	UL 60691	E214712
	CAN-CSA-E60691	E214712
	EN 60691	R50384415
	J60691	PSE16021063、PSE16021064 PSE16021065、PSE16021066 PSE16021067、PSE16021068
	GB 9816.1	2020980205000195

Dimensions (mm)

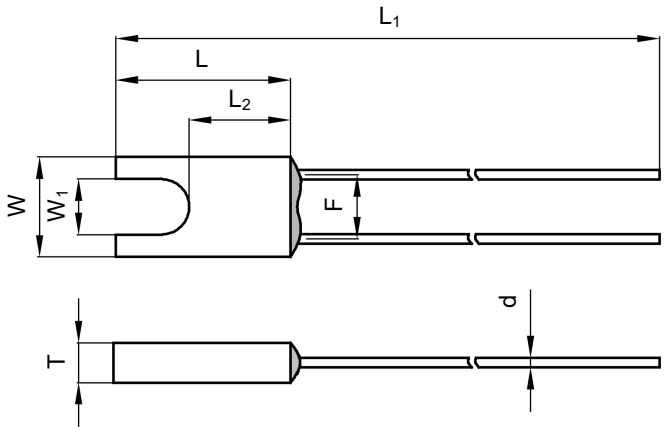

L	L_1	L_2	W	W_1	T	d	F
10.0 ± 0.5	74.0 ± 3.0	5.8 ± 0.5	5.8 ± 0.5	3.2 ± 0.5	2.3 ± 0.2	0.54 ± 0.05	3.7 ± 0.5

All Rights Reserved by Xiamen SET Electronics Co., Ltd. 2021-2023 V2.3

Specifications

Model	T_f	Fusing Temp.	T_h	T_m	I_r	U_r	UL	cUL	TUV	PSE	CCC	RoHS REACH
	(°C)	(°C)	(°C)	(°C)	(A)	(V)						
KG0	76	73 ± 2	53	200	2	AC 250	●	●	●	●	●	●
KG18	86	81 ± 2	61	200	2	AC 250	●	●	●	●	●	●
						DC 60	●	●	○	○	○	●
KG1	102	98 ± 2	79	200	2	AC 250	●	●	●	●	●	●
						DC 60	●	●	○	○	○	●
KG2	115	111 ± 2	91	200	2	AC 250	●	●	●	●	●	●
						DC 60	●	●	○	○	○	●
KG3	125	121 ± 2	100	200	2	AC 250	●	●	●	●	●	●
						DC 60	●	●	○	○	○	●
KG4	130	125 ± 2	106	200	2	AC 250	●	●	●	●	●	●
KG8	133	130 ± 2	111	200	2	AC 250	●	●	●	●	●	●
KG5	135	130 ± 2	111	200	2	AC 250	●	●	●	●	●	●
KG9	136	131 ± 2	112	200	2	AC 250	●	●	●	●	●	●
KG6	145	140 ± 2	121	200	2	AC 250	●	●	●	●	●	●
KG7	150	145 ± 2	126	200	2	AC 250	●	●	●	●	●	●
KG16	160	154 ± 2	135	200	2	AC 250	○	○	●	●	●	●
KG32	205	199 ± 3	169	250	2	AC 250	●	●	●	●	○	●
KG31	221	218 ± 2	188	250	2	AC 250	●	●	●	●	○	●

Note:

"● "Means certificated.

"○ "Means non-certificated.

All Rights Reserved by Xiamen SET Electronics Co., Ltd. 2021-2023 V2.3

Packaging Information

Bulk

Item	PE Bag	PE Bag	Carton
Dimensions (mm)	135 × 85	190 × 180	440 × 300 × 260
Quantity (PCS)	100	1000	40000
Gross Weight (kg)			17.0 ± 10%

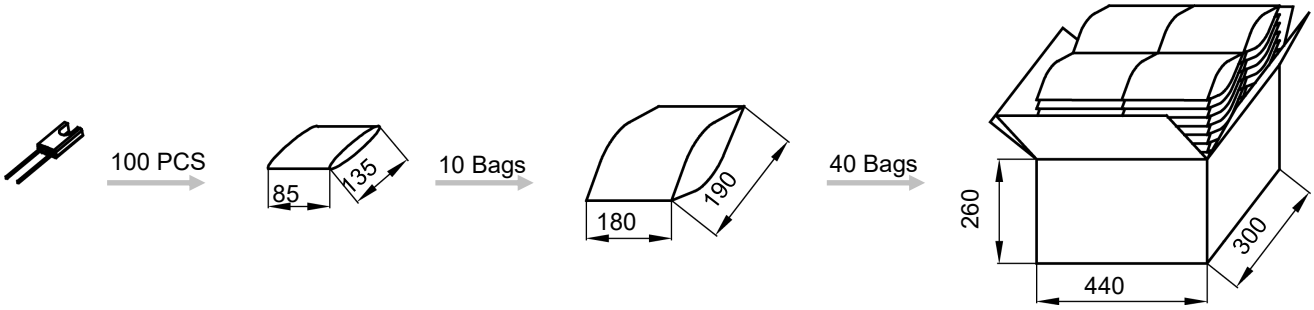

Taping

Item	Box	Carton
Dimensions (mm)	328 × 200 × 70	480 × 340 × 220
Quantity (PCS)	2000	12000
Gross Weight (kg)		6.0 ± 10%

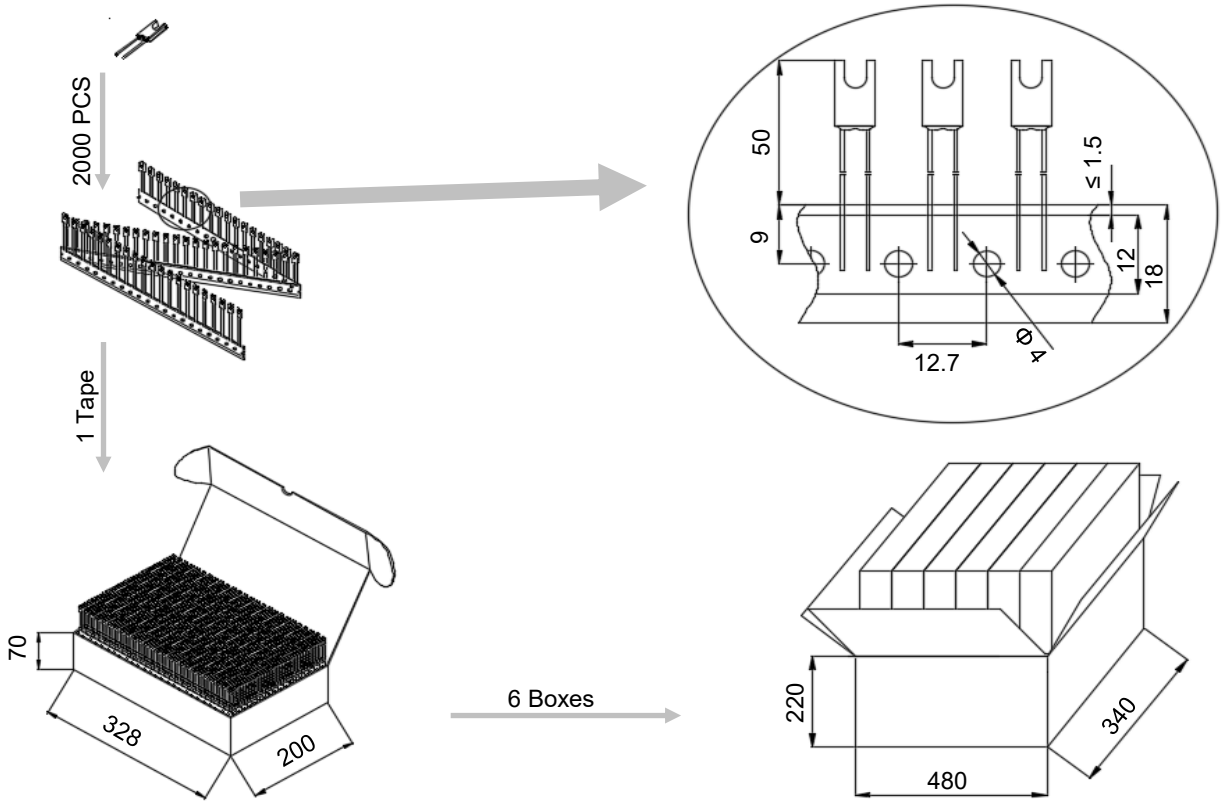

All Rights Reserved by Xiamen SET Electronics Co., Ltd. 2021-2023 V2.3

Product Temp.-Time Curve (For Reference Only)

The Temp.-Time Curve of Thermal-Link in different Temp. oil baths.

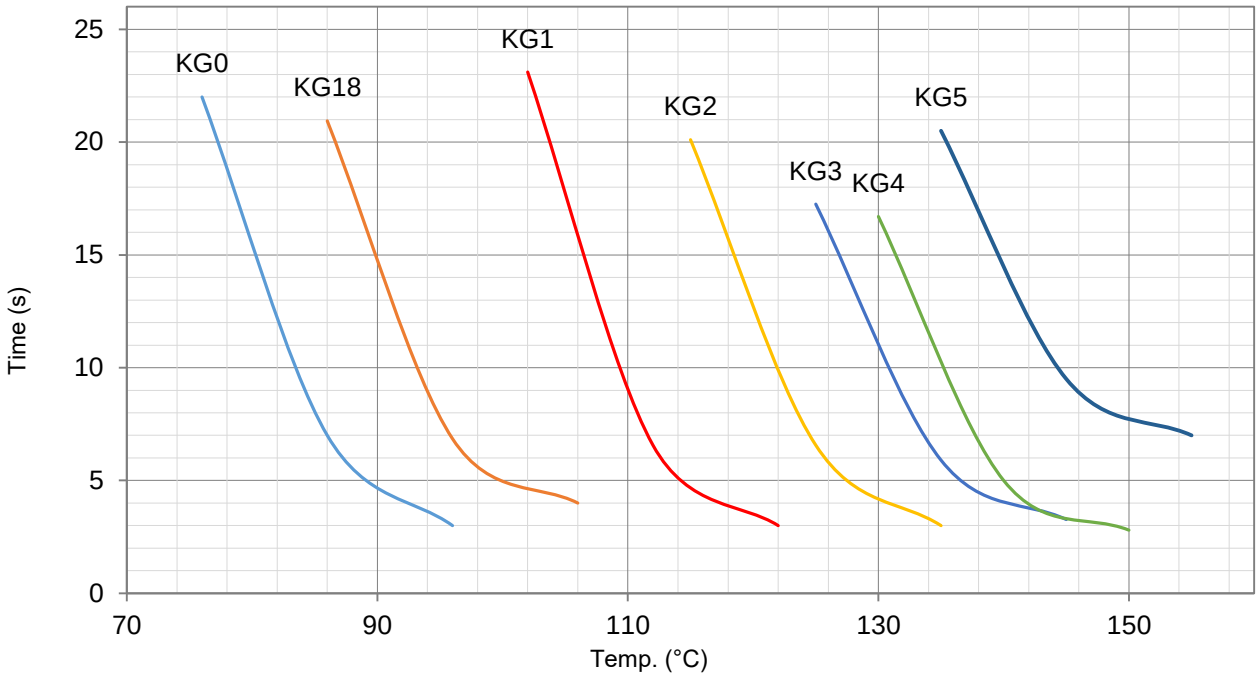

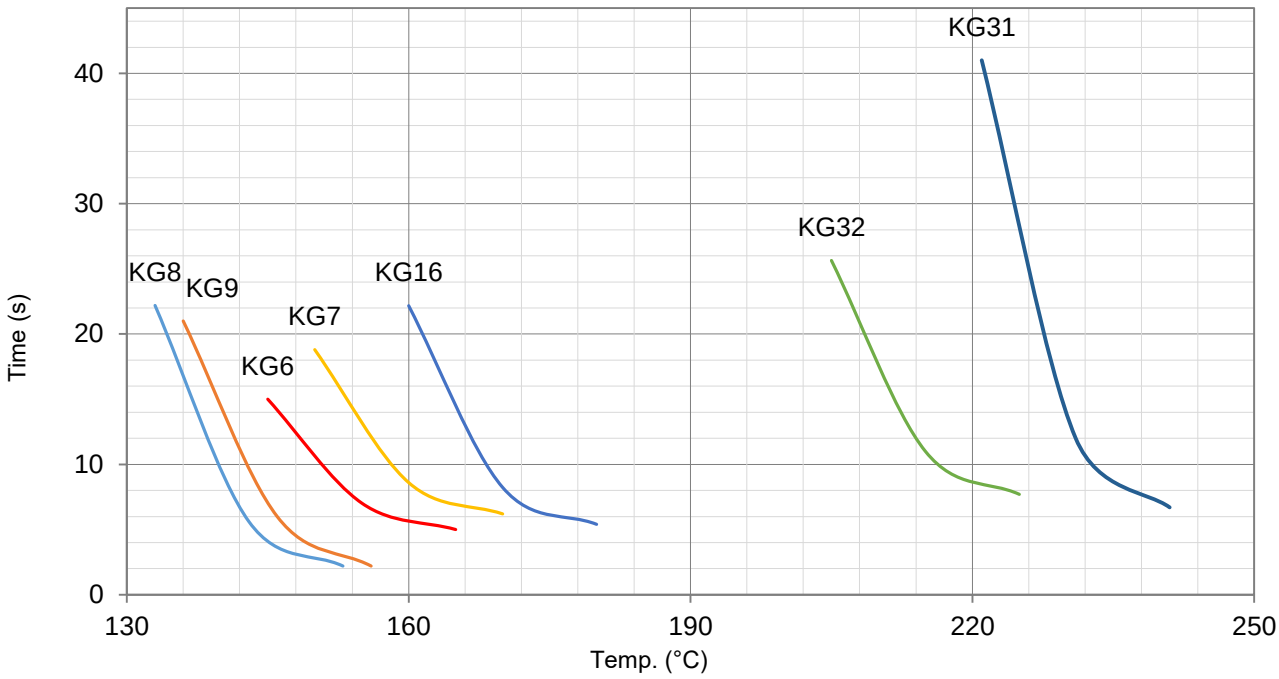

All Rights Reserved by Xiamen SET Electronics Co., Ltd. 2021-2023 V2.3

Product Current-Time Curve (For Reference Only)

The Current-Time Curve shows functioning time at multi-times rated current at room temperature 25 ± 2 °C.

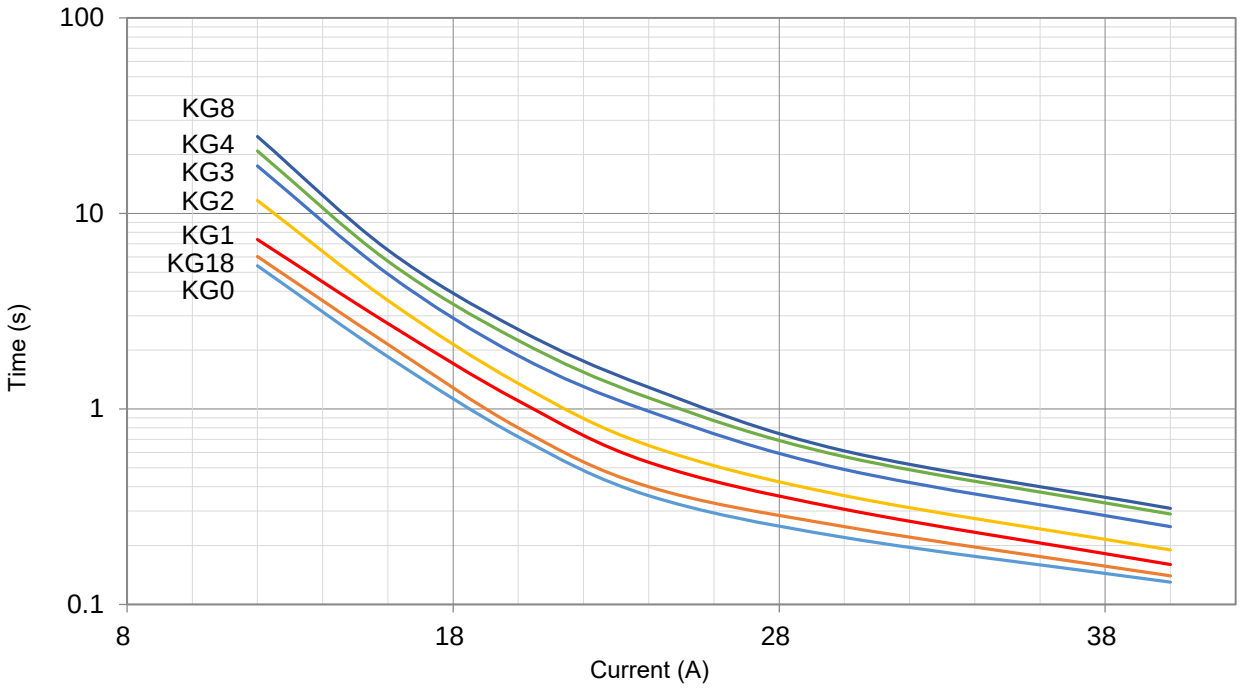

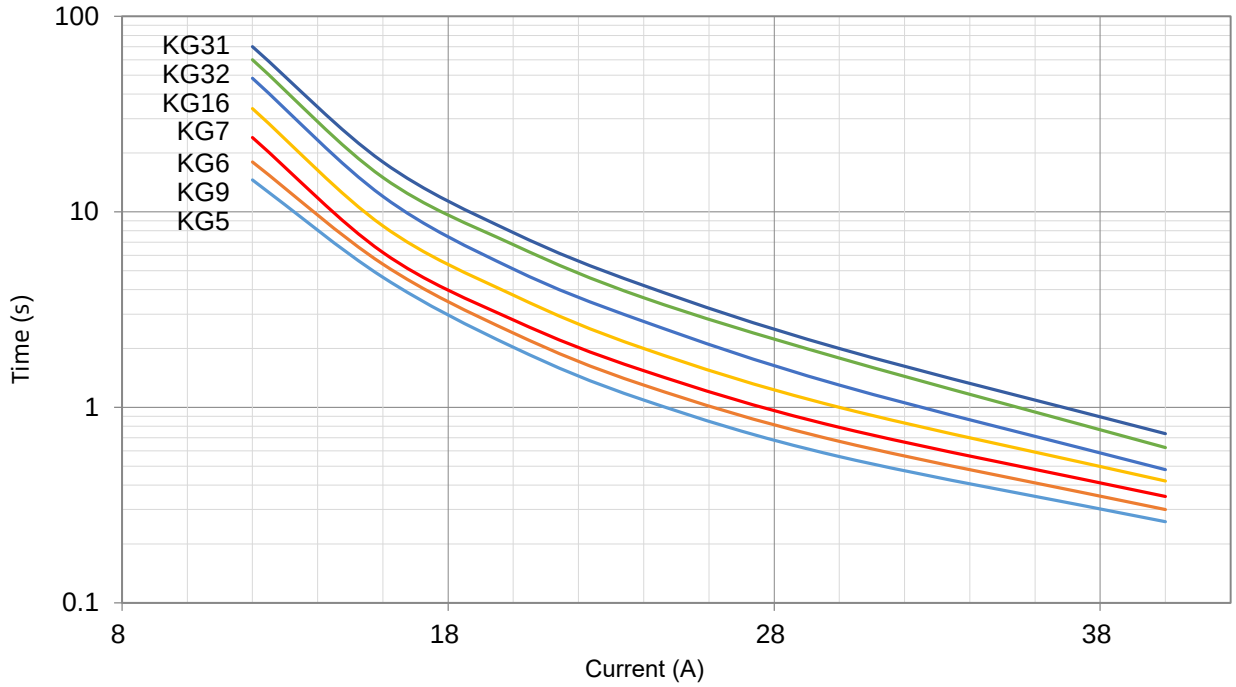

All Rights Reserved by Xiamen SET Electronics Co., Ltd. 2021-2023 V2.3

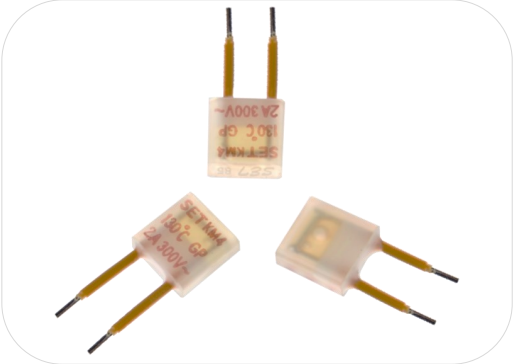

Applications

- Lamps
- Switched-Mode Power Supplies
- Home Electrical Appliances
- Transformers
- Motors
- Batteries

Features

- High Accuracy of Functioning Temp.
- Non-Resettable
- Rated Voltage 300 VAC
- Lead Wires Insulated
- RoHS & REACH Compliant

Customization

- Temp.
- The Length of Lead Wires
- Taping Packing Available
- Tinned Copper Wires or CP Wires

Agency Approvals

Agency Mark	Standards	No.
®	UL 60691	E214712
c ®	CAN-CSA-E60691	E214712
TÜVRheinland	EN 60691	R50388884
	GB 9816.1	2023000205000009

Dimensions (mm)

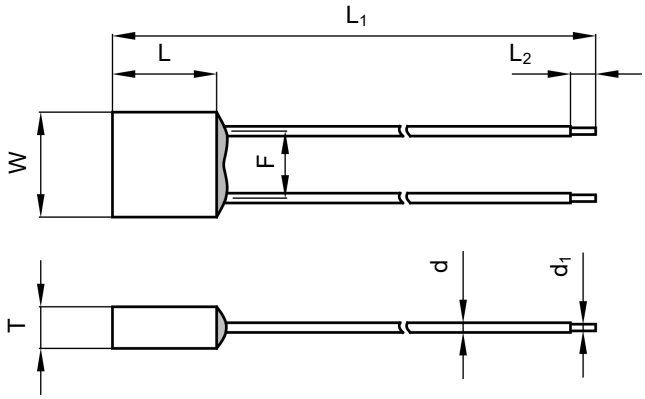

L	L_1	L_2	W	T	d	d_1	F
5.8 ± 0.5	70.0 ± 3.0	5.0 ± 1.0	5.8 ± 0.5	2.3 ± 0.2	0.8 ± 0.1	0.54 ± 0.05	3.7 ± 0.5

All Rights Reserved by Xiamen SET Electronics Co., Ltd. 2021-2023 V2.3

Specifications

Model	T_f	Fusing Temp.	T_h	T_m	I_r	U_r	UL	cUL	TUV	CCC	RoHS、REACH
	(°C)	(°C)	(°C)	(°C)	(A)	(V)					
KM3	125	121 ± 2	100	200	2	AC 300	○	○	○	●	●
						AC 320	●	●	○	○	●
KM4	130	125 ± 2	106	200	2	AC 300	●	●	●	●	●
						AC 320	●	●	○	○	●
KM5	135	130 ± 2	111	200	2	AC 300	●	●	●	●	●
						AC 320	●	●	○	○	●
KM7	150	145 ± 2	126	200	2	AC 300	●	●	●	●	●
						AC 320	●	●	○	○	●

Note:
"●"Means certificated.
"○"Means non-certificated.

All Rights Reserved by Xiamen SET Electronics Co., Ltd. 2021-2023 V2.3

Packaging Information

Bulk

Item	PE Bag	PE Bag	Carton
Dimensions (mm)	135 × 85	190 × 180	440 × 300 × 260
Quantity (PCS)	100	1000	50000
Gross Weight (kg)			21.0± 10%

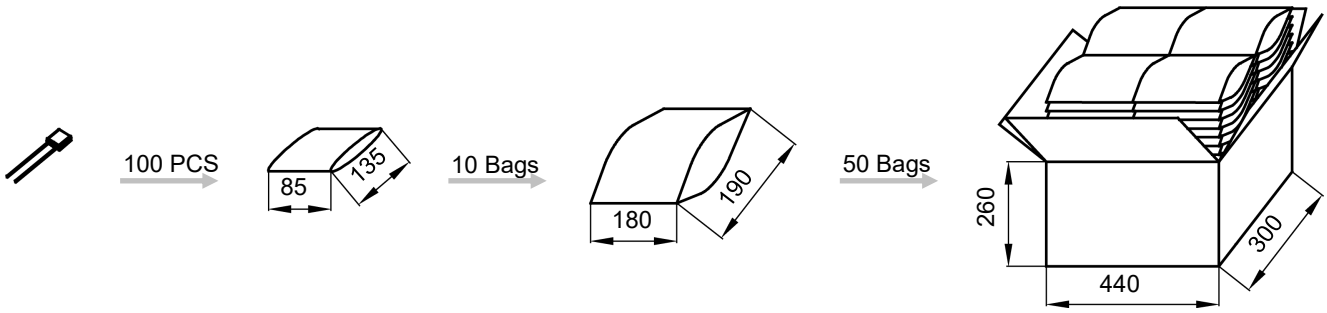

Taping

Item	Box	Carton
Dimensions (mm)	328 × 200 × 70	480 × 340 × 220
Quantity (PCS)	2000	12000
Gross Weight (kg)		6.5 ± 10%

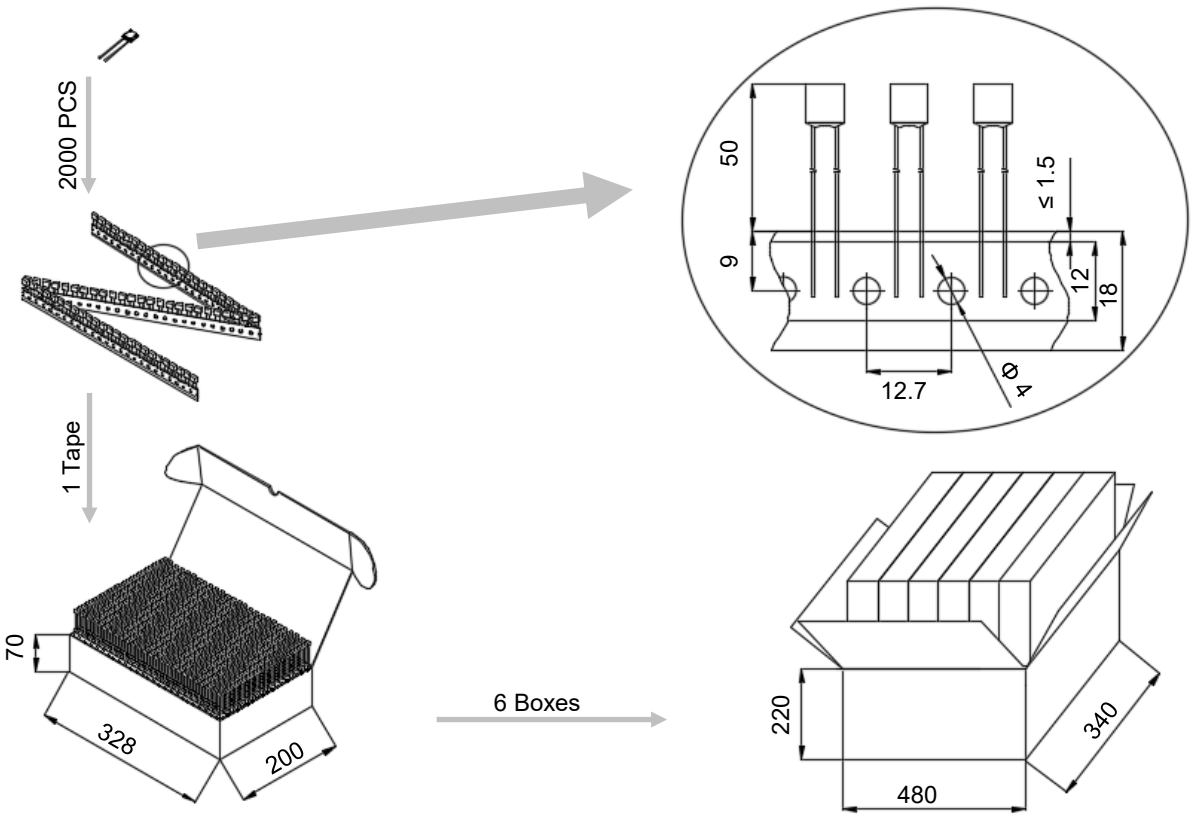

All Rights Reserved by Xiamen SET Electronics Co., Ltd. 2021-2023 V2.3

Product Temp.-Time Curve (For Reference Only)

The Temp.-Time Curve of Thermal-Link in different Temp. oil baths.

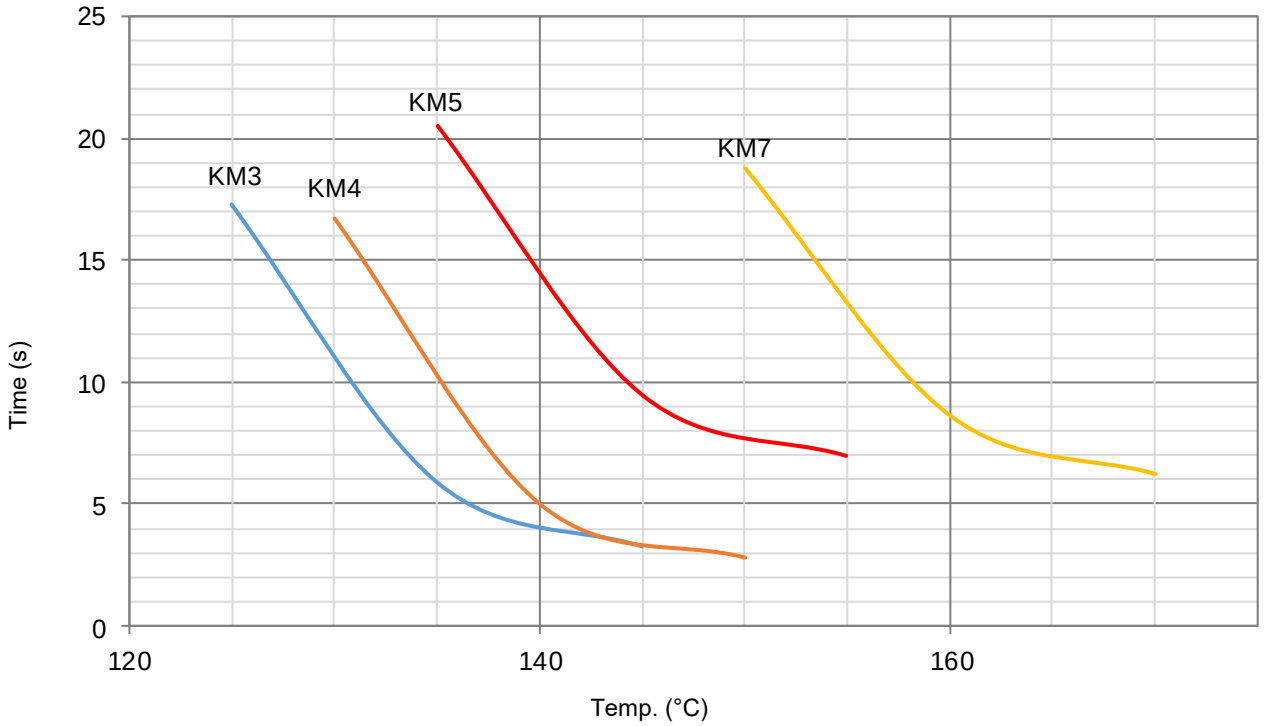

Product Current-Time Curve (For Reference Only)

The Current-Time Curve shows functioning time at multi-times rated current at room temperature 25 ± 2 °C.

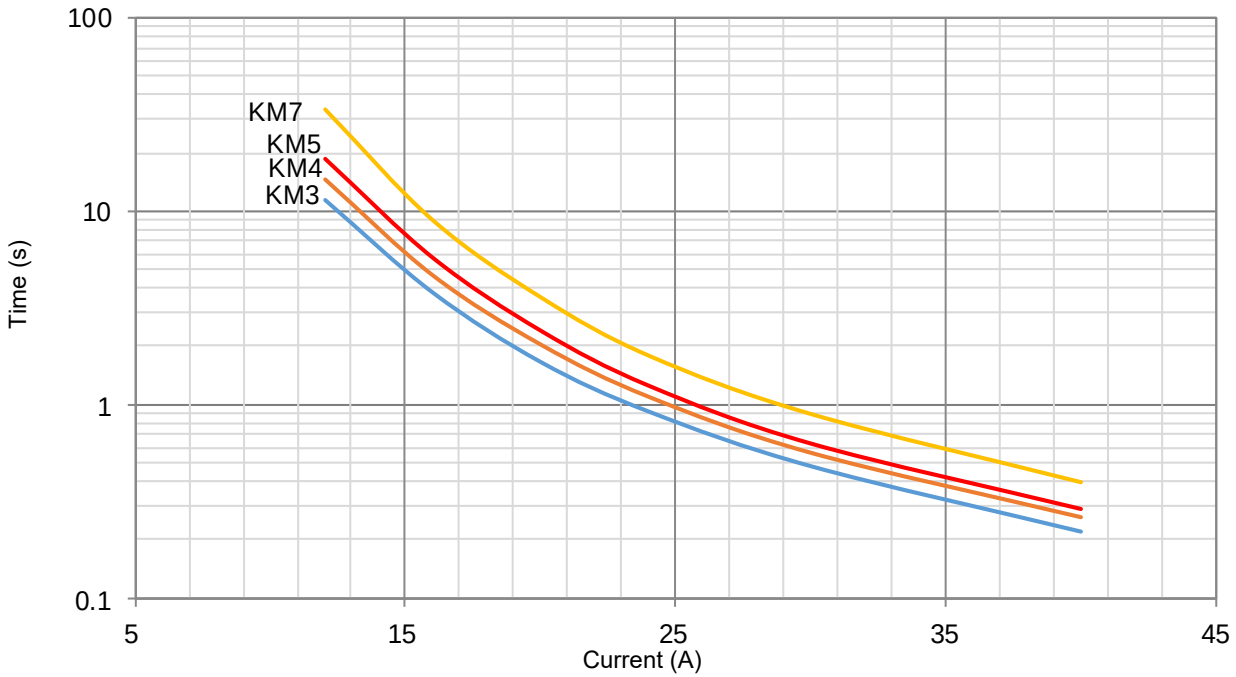

All Rights Reserved by Xiamen SET Electronics Co., Ltd. 2021-2023 V2.3

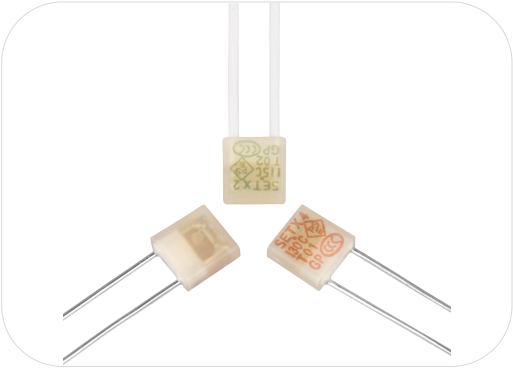

Applications

- Lamps
- Switched-Mode Power Supplies
- Home Electrical Appliances
- Transformers
- Motors
- Batteries

Features

- High Accuracy of Functioning Temp.
- Non-Resettable
- RoHS & REACH Compliant

Customization

- Temp.
- The Length of Lead Wires
- Taping Packing Available
- Lead Wires can be Insulated
- Tinned Copper Wires or CP Wires

ATCO

Agency Approvals

Agency Mark	Standards	No.
	UL 60691	E214712
	CAN-CSA-E60691	E214712
	EN 60691	R50161779
	EN 60691	40017055
	J60691	PSE16021063、PSE16021064 PSE16021065、PSE16021066 PSE16021067
	K60691	SU05023-6001A、SU05023-6003A SU05023-6003B
	GB 9816.1	2020980205000195

Dimensions (mm)

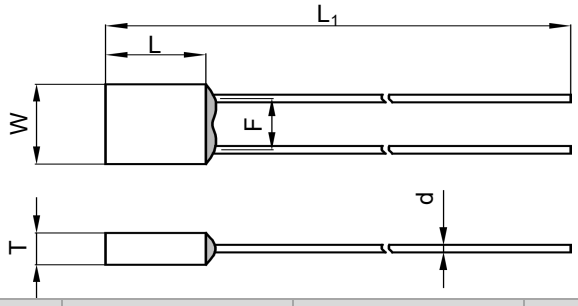

L	L_1	W	T	d	F
5.8 ± 0.5	70.0 ± 3.0	5.8 ± 0.5	2.3 ± 0.2	0.54 ± 0.05	3.7 ± 0.5

All Rights Reserved by Xiamen SET Electronics Co., Ltd. 2021-2023 V2.3

Specifications

Model	T_f	Fusing Temp.	T_h	T_m	I_r	U_r	UL	cUL	TUV	VDE	PSE	KC	CCC	RoHS REACH
	(°C)	(°C)	(°C)	(°C)	(A)	(V)								
X0	76	73 ± 2	53	200	3	AC 250	●	●	●	○	●	○	●	●
X18	86	81 ± 2	61	200	3	AC 250	●	●	○	●	●	●	●	●
						DC 60	●	●	○	○	○	○	○	●
X1	102	98 ± 2	79	200	3	AC 250	●	●	○	●	●	●	●	●
						DC 60	●	●	○	○	○	○	○	●
X2	115	111 ± 2	91	200	3	AC 250	●	●	○	●	●	●	●	●
						DC 60	●	●	○	○	○	○	○	●
X3	125	121 ± 2	100	200	3	AC 250	●	●	○	●	●	●	●	●
						DC 60	●	●	○	○	○	○	○	●
X4	130	125 ± 2	106	200	3	AC 250	●	●	○	●	●	●	●	●
X8	133	130 ± 2	111	200	3	AC 250	●	●	○	●	●	●	●	●
X5	135	130 ± 2	111	200	3	AC 250	●	●	○	●	●	●	●	●
X9	136	131 ± 2	112	200	3	AC 250	●	●	○	●	●	●	●	●
			85		4	DC 60	●	●	○	○	○	○	○	●
X6	145	140 ± 2	121	200	3	AC 250	●	●	○	●	●	●	●	●
			100		4	DC 60	●	●	○	○	○	○	○	●
X7	150	145 ± 2	126	200	3	AC 250	●	●	○	●	●	●	●	●
X16	160	154 ± 2	135	200	3	AC 250	○	○	○	○	●	○	●	●
X17	187	182 ± 3	162	250	3	AC 250	○	○	●	○	●	○	○	●
X32	205	199 ± 3	169	250	3	AC 250	●	●	●	○	○	○	●	●
X31	221	218 ± 2	188	250	3	AC 250	●	●	●	○	○	○	●	●

Note:

"● "Means certificated.

"○ "Means non-certificated.

All Rights Reserved by Xiamen SET Electronics Co., Ltd. 2021-2023 V2.3

Packaging Information

Bulk

Item	PE Bag	PE Bag	Carton
Dimensions (mm)	135 × 85	190 × 180	440 × 300 × 260
Quantity (PCS)	100	1000	50000
Gross Weight (kg)			20.0± 10%

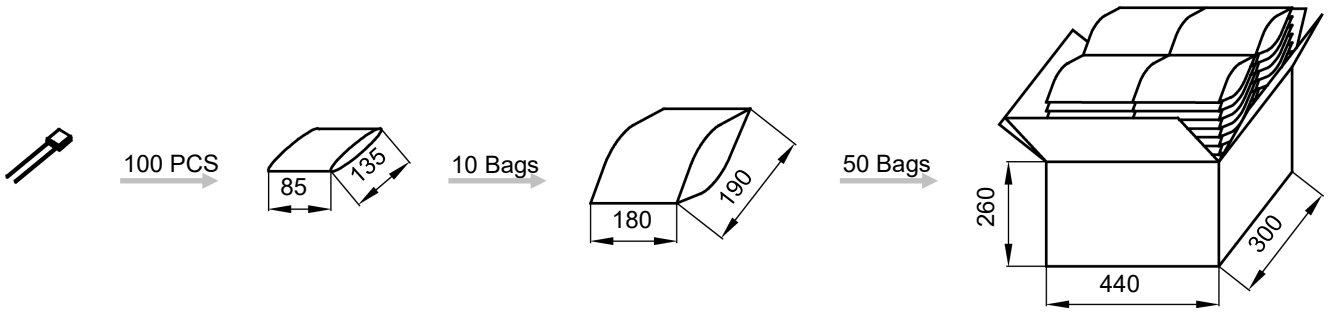

Taping

Item	Box	Carton
Dimensions (mm)	328 × 200 × 70	480 × 340 × 220
Quantity (PCS)	2000	12000
Gross Weight (kg)		6 .0± 10%

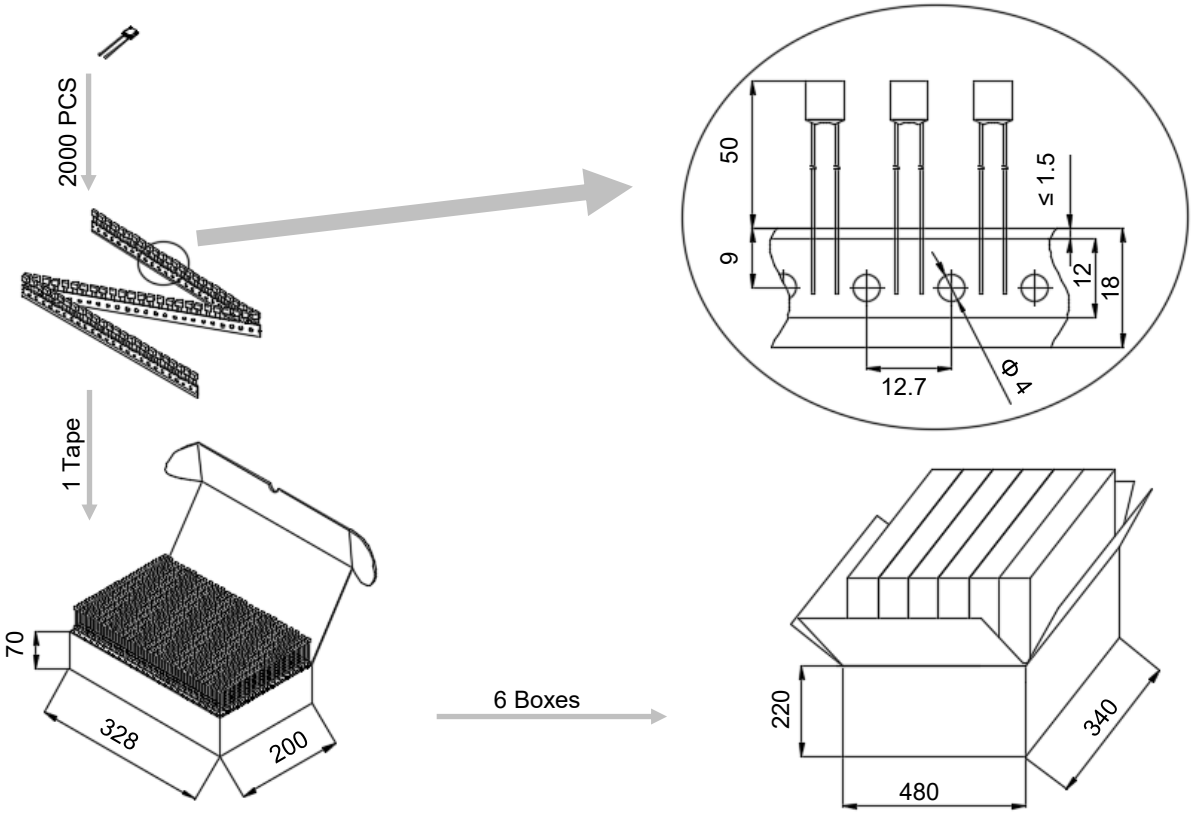

All Rights Reserved by Xiamen SET Electronics Co., Ltd. 2021-2023 V2.3

Product Temp.-Time Curve (For Reference Only)

The Temp.-Time Curve of Thermal-Link in different Temp. oil baths.

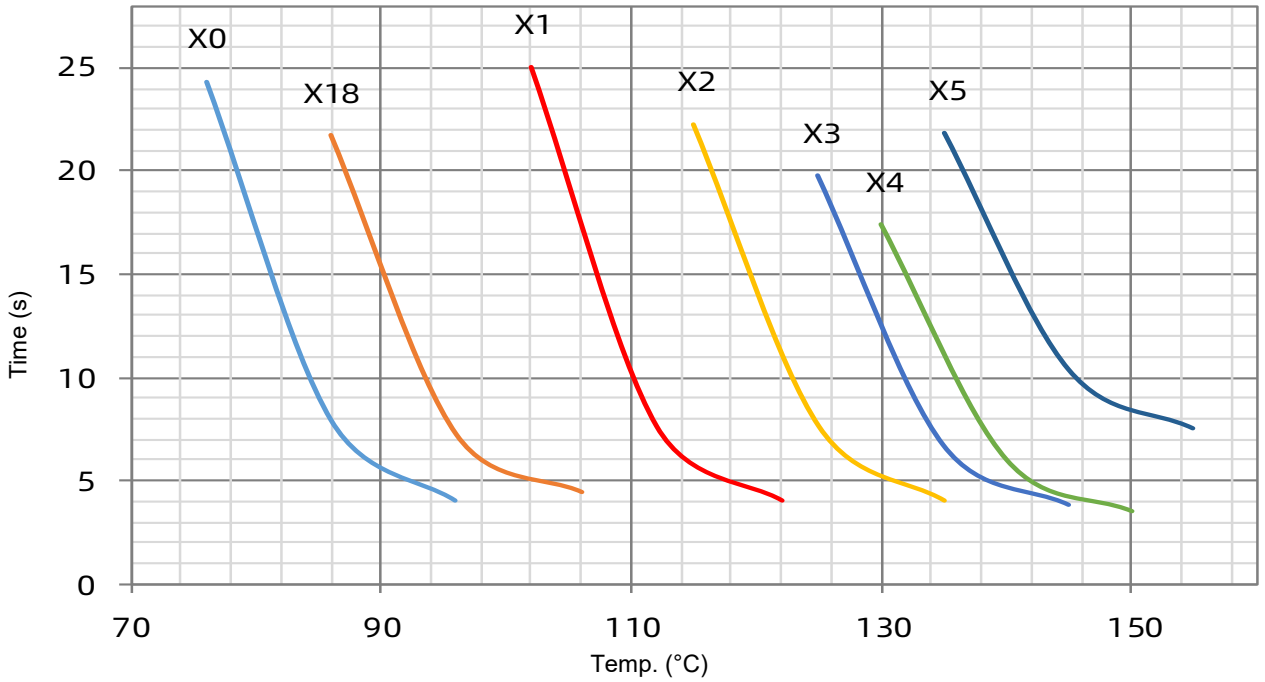

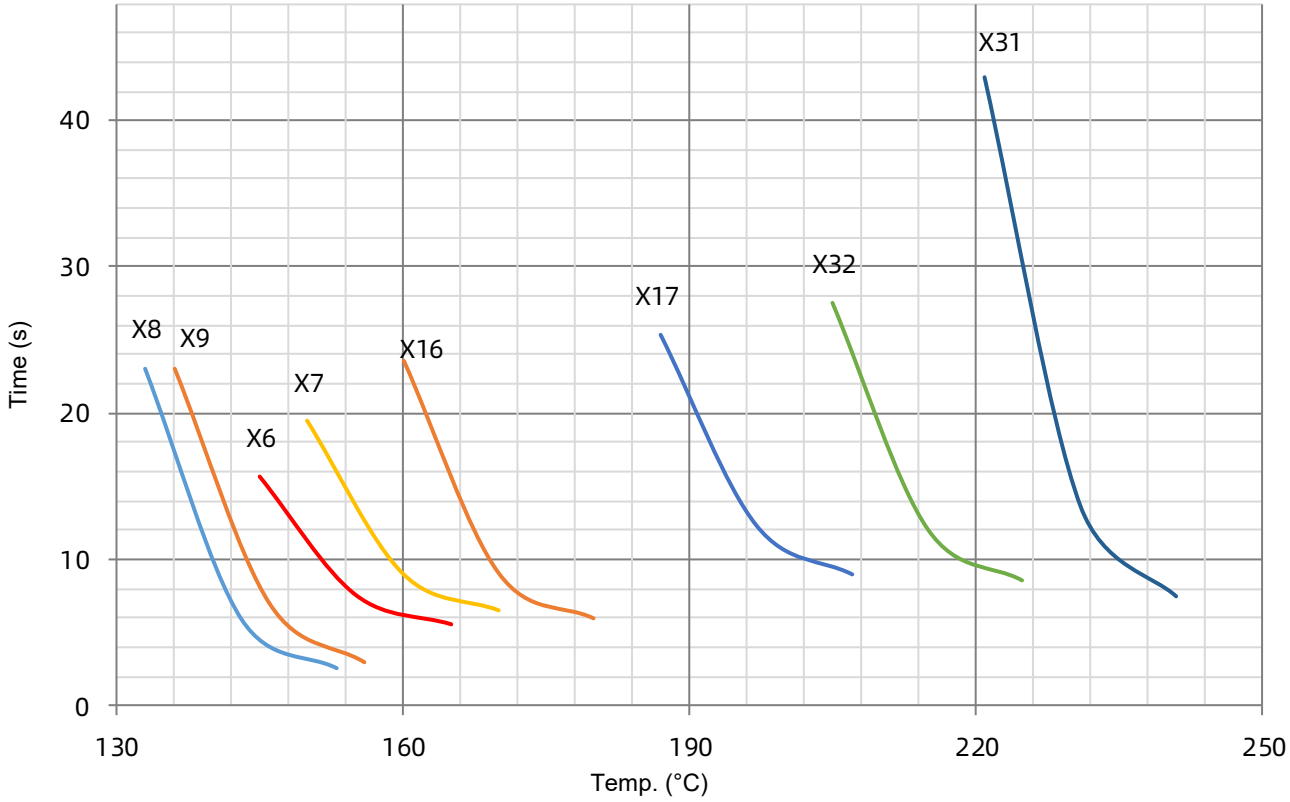

All Rights Reserved by Xiamen SET Electronics Co., Ltd. 2021-2023 V2.3

Product Current-Time Curve (For Reference Only)

The Current-Time Curve shows functioning time at multi-times rated current at room temperature 25 ± 2 °C.

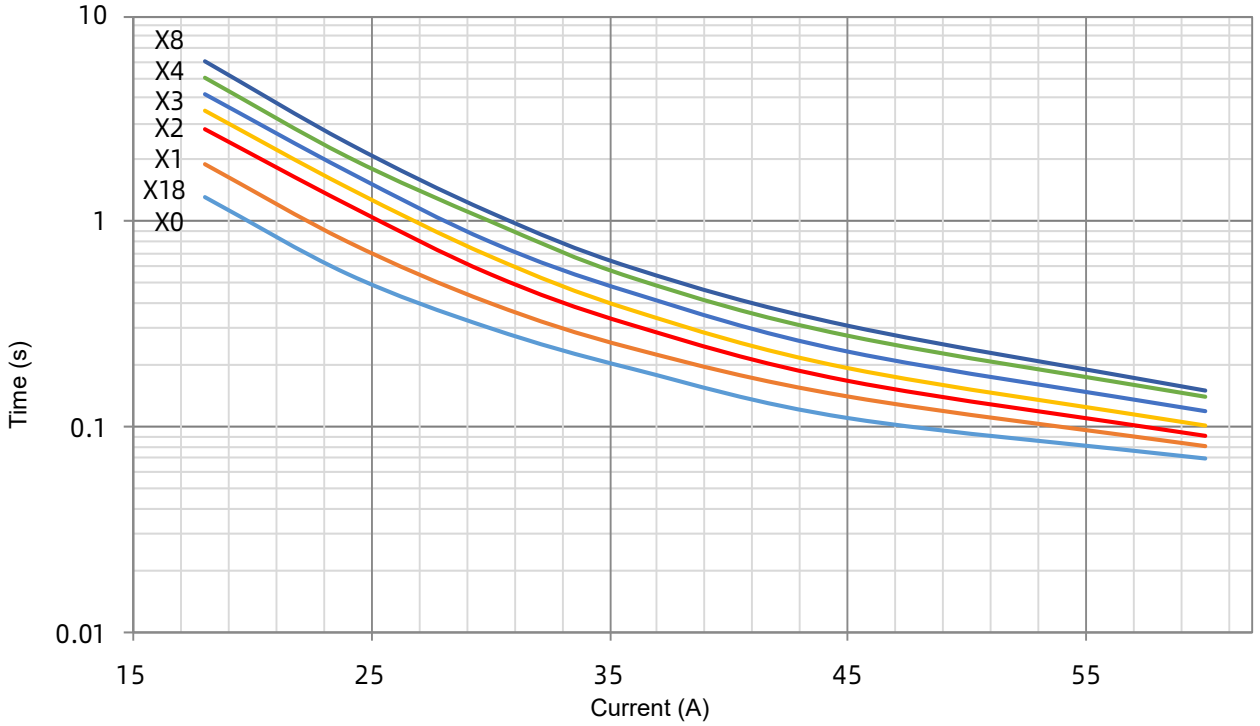

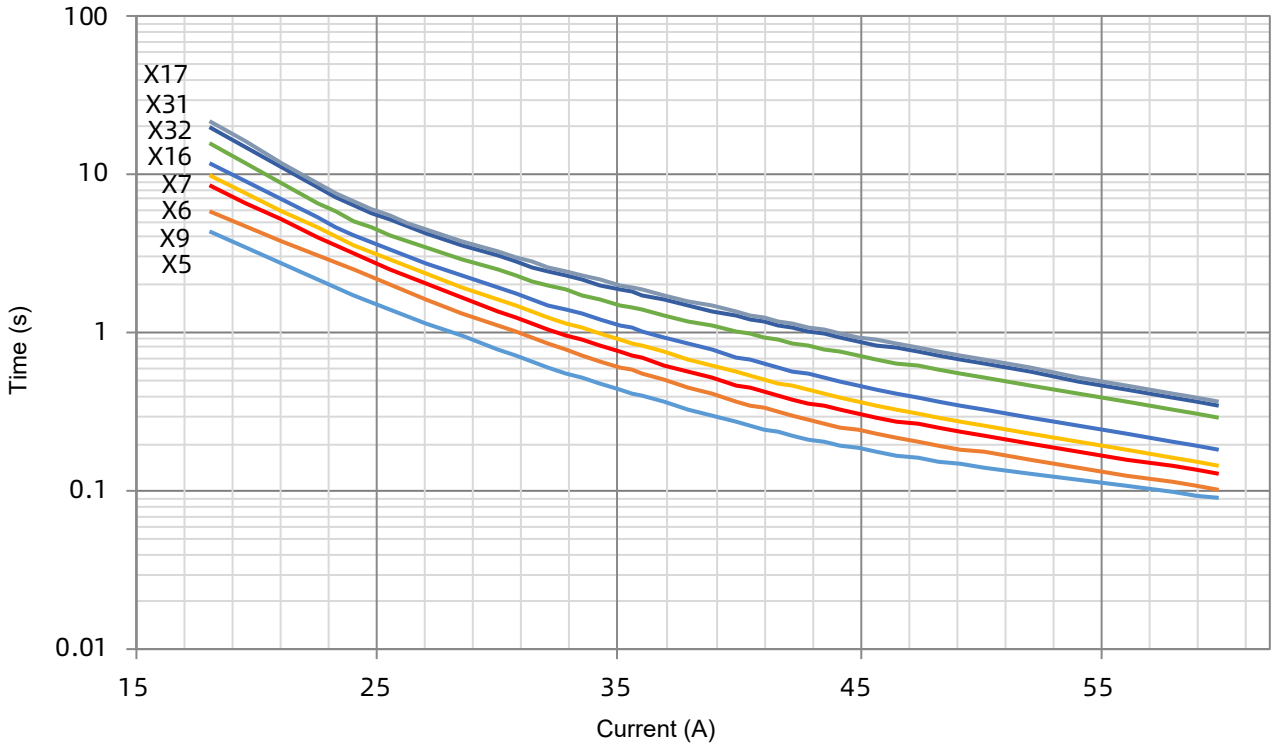

All Rights Reserved by Xiamen SET Electronics Co., Ltd. 2021-2023 V2.3

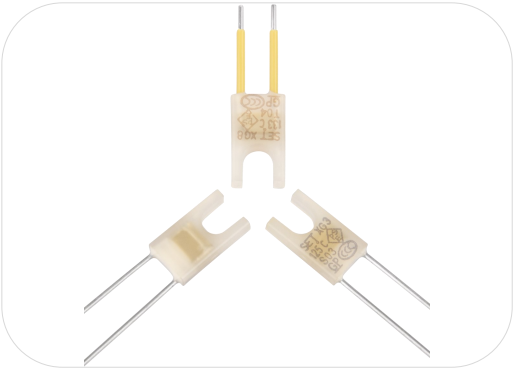

Applications

- Lamps
- Switched-Mode Power Supplies
- Home Electrical Appliances
- Batteries

Features

- High Accuracy of Functioning Temp.
- Non-Resettable
- Make a Mounting Hole
- RoHS & REACH Compliant

Customization

- Temp.
- The Length of Lead Wires
- Taping Packing Available
- Lead Wires can be Insulated
- Tinned Copper Wires or CP Wires

ATCO

Agency Approvals

Agency Mark	Standards	No.
	UL 60691	E214712
	CAN-CSA-E60691	E214712
	EN 60691	R50384415
	J60691	PSE16021063、PSE16021064 PSE16021065、PSE16021066 PSE16021067、PSE16021068
	GB 9816.1	2020980205000195

Dimensions (mm)

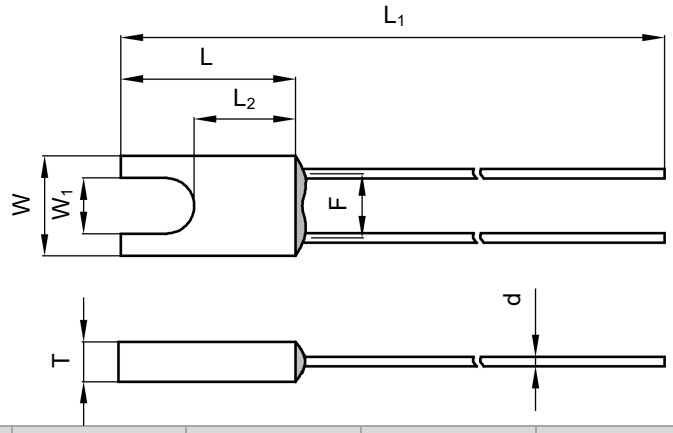

L	L_1	L_2	W	W_1	T	d	F
10.0 ± 0.5	74.0 ± 3.0	5.8 ± 0.5	5.8 ± 0.5	3.2 ± 0.5	2.3 ± 0.2	0.54 ± 0.05	3.7 ± 0.5

All Rights Reserved by Xiamen SET Electronics Co., Ltd. 2021-2023 V2.3

Specifications

Model	T_f	Fusing Temp.	T_h	T_m	I_r	U_r	UL	cUL	TUV	PSE	CCC	RoHS REACH
	(°C)	(°C)	(°C)	(°C)	(A)	(V)						
XG0	76	73 ± 2	53	200	3	AC 250	●	●	●	●	●	●
XG18	86	81 ± 2	61	200	3	AC 250	●	●	●	●	●	●
						DC 60	●	●	○	○	○	●
XG1	102	98 ± 2	79	200	3	AC 250	●	●	●	●	●	●
						DC 60	●	●	○	○	○	●
XG2	115	111 ± 2	91	200	3	AC 250	●	●	●	●	●	●
						DC 60	●	●	○	○	○	●
XG3	125	121 ± 2	100	200	3	AC 250	●	●	●	●	●	●
						DC 60	●	●	○	○	○	●
XG4	130	125 ± 2	106	200	3	AC 250	●	●	●	●	●	●
XG8	133	130 ± 2	111	200	3	AC 250	●	●	●	●	●	●
XG5	135	130 ± 2	111	200	3	AC 250	●	●	●	●	●	●
XG9	136	131 ± 2	112	200	3	AC 250	●	●	●	●	●	●
XG6	145	140 ± 2	121	200	3	AC 250	●	●	●	●	●	●
XG7	150	145 ± 2	126	200	3	AC 250	●	●	●	●	●	●
XG16	160	154 ± 2	135	200	3	AC 250	○	○	●	●	●	●
XG32	205	199 ± 3	169	250	3	AC 250	●	●	●	●	○	●
XG31	221	218 ± 2	188	250	3	AC 250	●	●	●	●	○	●

Note:

"● "Means certificated.

"○ "Means non-certificated.

All Rights Reserved by Xiamen SET Electronics Co., Ltd. 2021-2023 V2.3

Packaging Information

Bulk

Item	PE Bag	PE Bag	Carton
Dimensions (mm)	135 × 85	190 × 180	440 × 300 × 260
Quantity (PCS)	100	1000	50000
Gross Weight (kg)			20.0 ± 10%

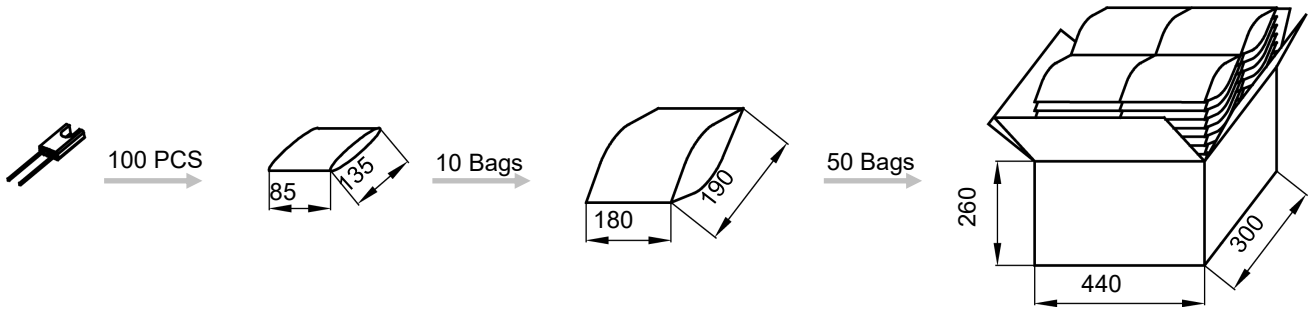

Taping

Item	Box	Carton
Dimensions (mm)	328 × 200 × 70	480 × 340 × 220
Quantity (PCS)	2000	12000
Gross Weight (kg)		6.0 ± 10%

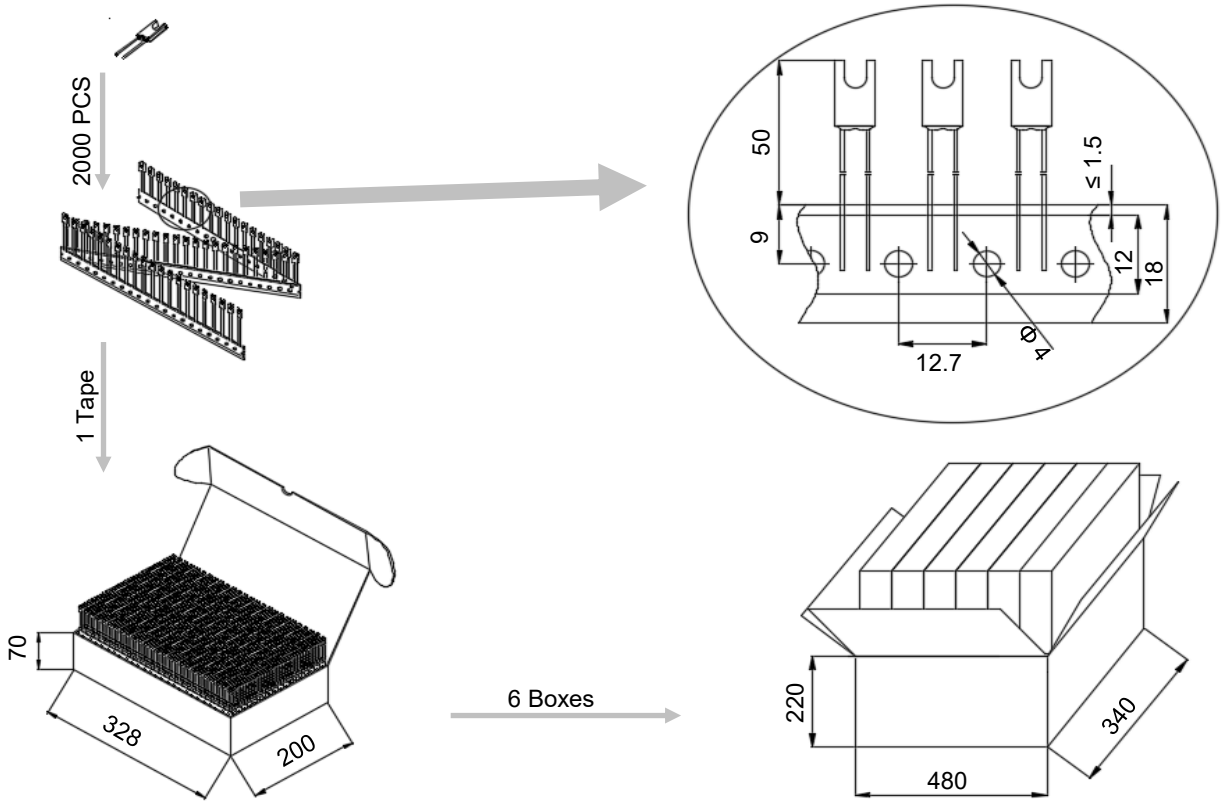

All Rights Reserved by Xiamen SET Electronics Co., Ltd. 2021-2023 V2.3

Product Temp.-Time Curve (For Reference Only)

The Temp.-Time Curve of Thermal-Link in different Temp. oil baths.

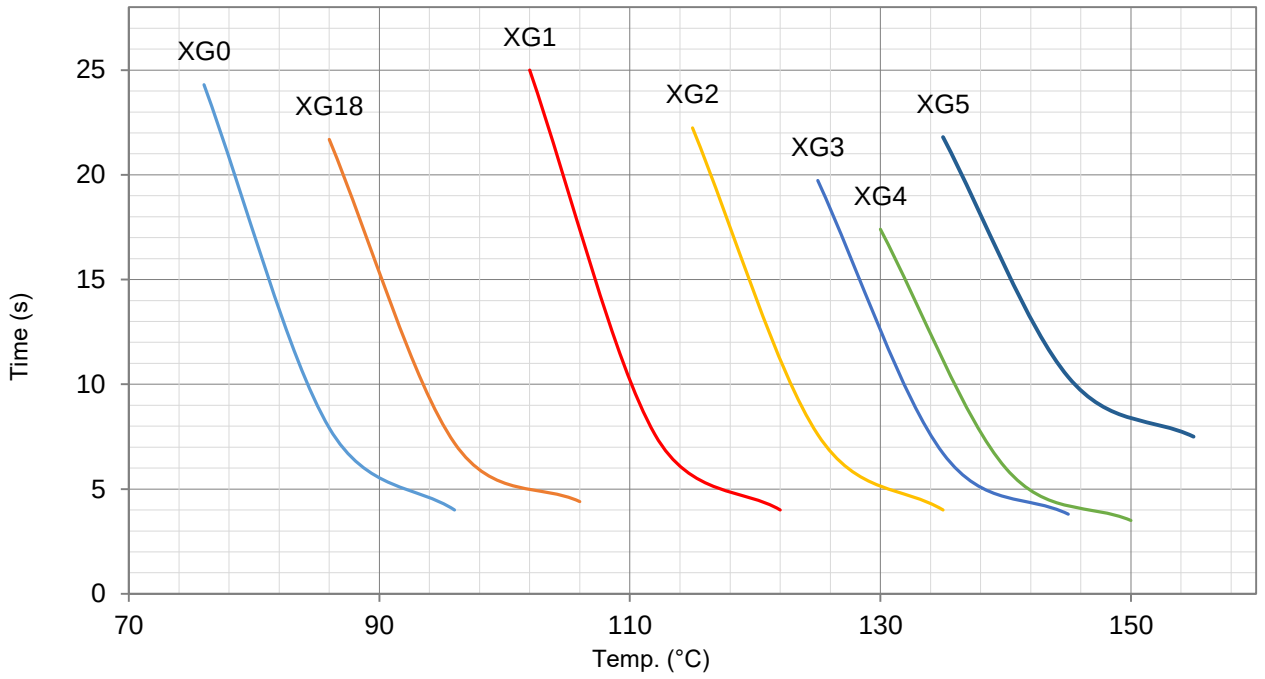

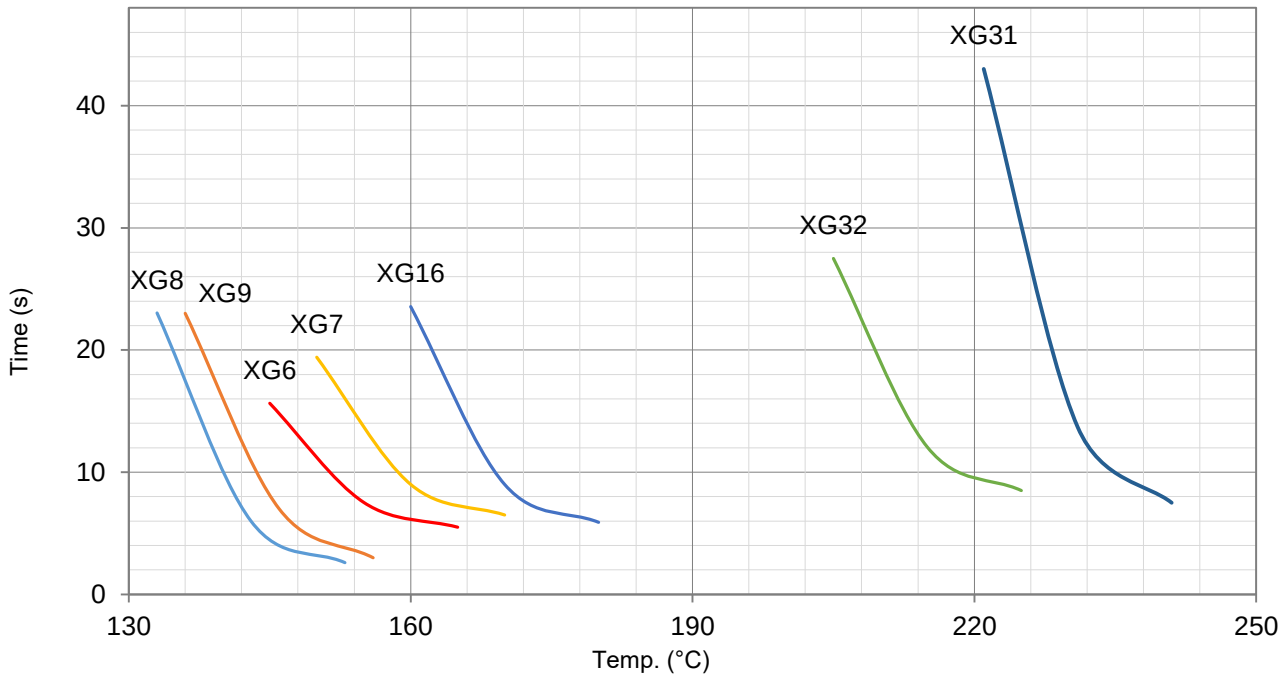

All Rights Reserved by Xiamen SET Electronics Co., Ltd. 2021-2023 V2.3

Product Current-Time Curve (For Reference Only)

The Current-Time Curve shows functioning time at multi-times rated current at room temperature 25 ± 2 °C.

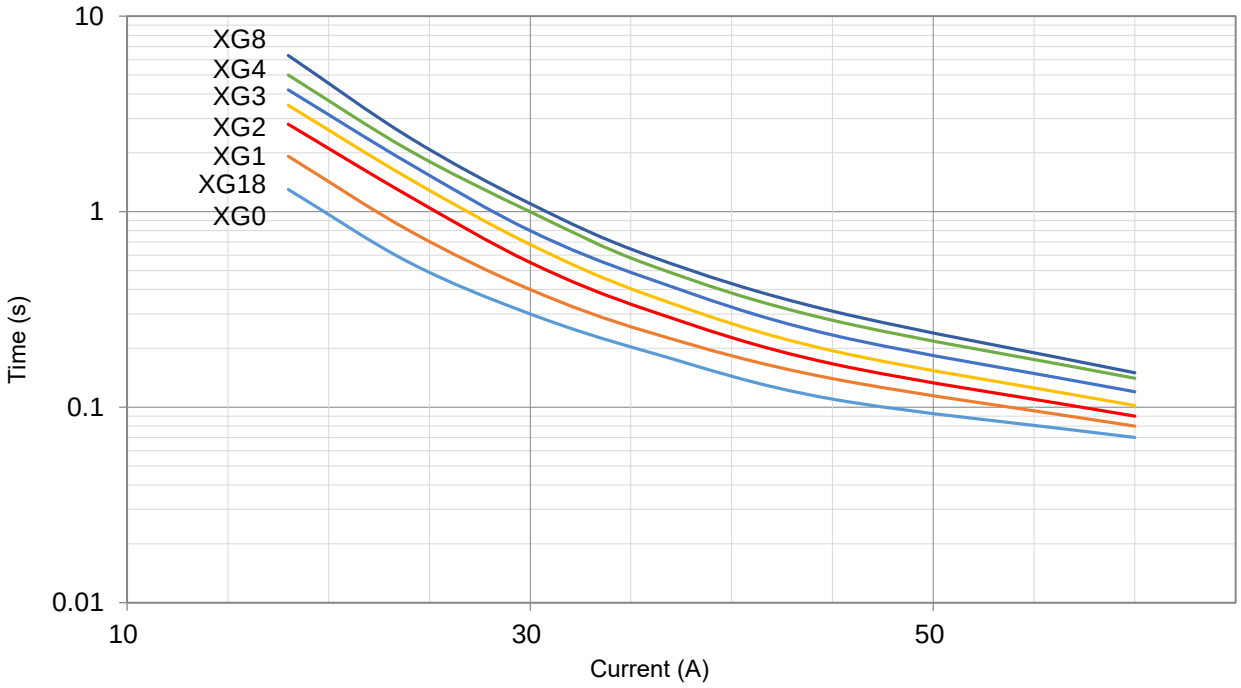

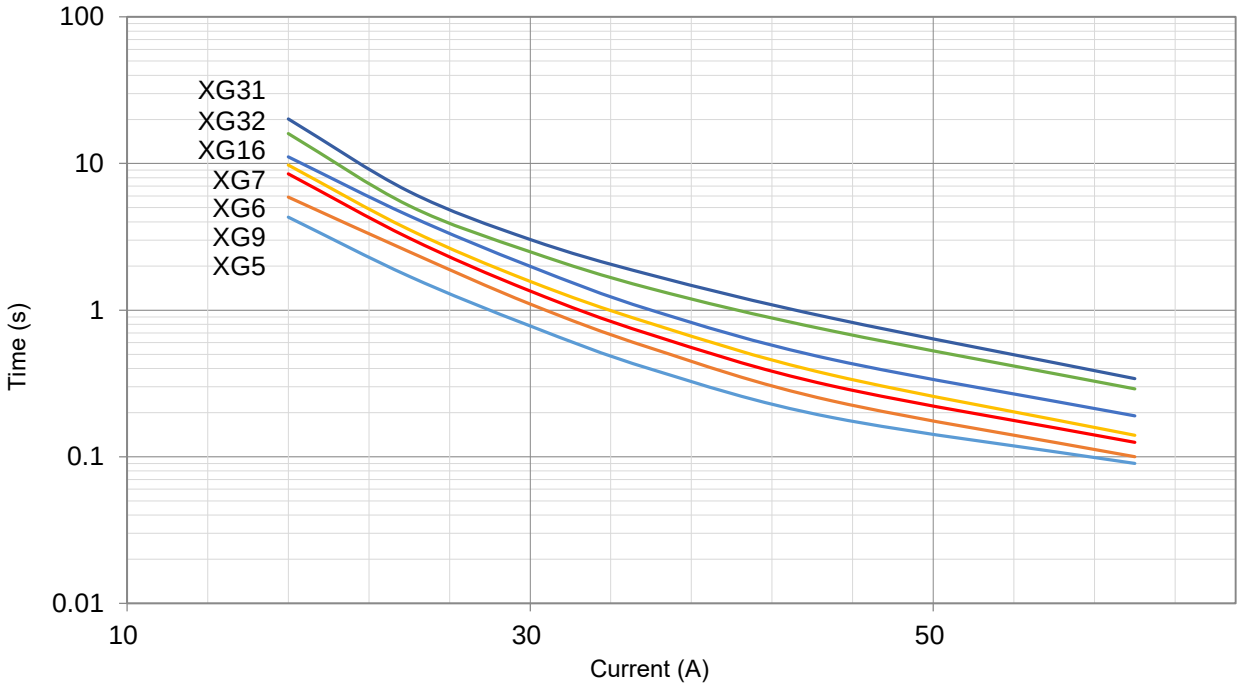

All Rights Reserved by Xiamen SET Electronics Co., Ltd. 2021-2023 V2.3

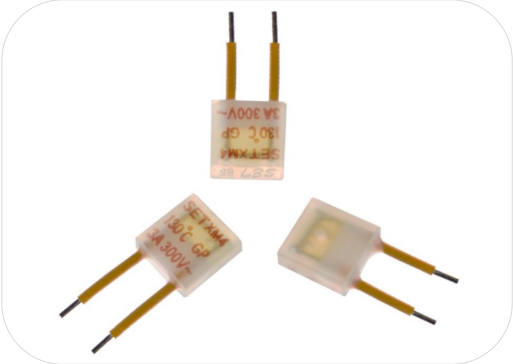

Applications

- Lamps
- Switched-Mode Power Supplies
- Home Electrical Appliances
- Transformers
- Motors
- Batteries

Features

- Accuracy of Functioning Temp.
- Non-Resettable
- Rated Voltage 300 VAC
- Lead Wires Insulated
- RoHS & REACH Compliant

Customization

- Temp.
- The Length of Lead Wires
- Taping Packing Available
- Tinned Copper Wires or CP Wires

Agency Approvals

Agency Mark	Standards	No.
	UL 60691	E214712
	CAN-CSA-E60691	E214712
	EN 60691	R50388884
	GB 9816.1	2023000205000009

Dimensions (mm)

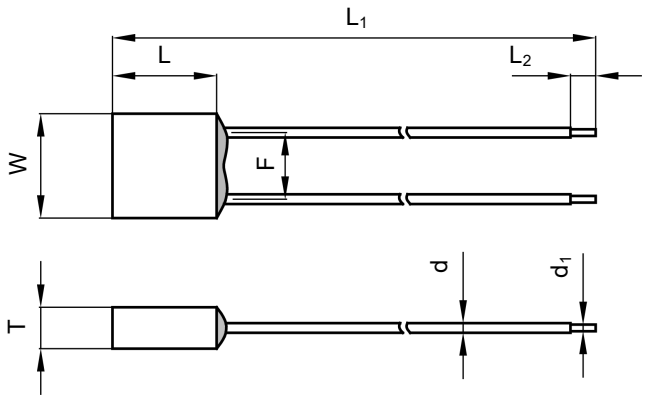

L	L_1	L_2	W	T	d	d_1	F
5.8 ± 0.5	70.0 ± 3.0	5.0 ± 1.0	5.8 ± 0.5	2.3 ± 0.2	0.8 ± 0.1	0.54 ± 0.05	3.7 ± 0.5

All Rights Reserved by Xiamen SET Electronics Co., Ltd. 2021-2023 V2.3

Specifications

Model	T_f	Fusing Temp.	T_h	T_m	I_r	U_r	UL	cUL	TUV	CCC	RoHS、REACH
	(°C)	(°C)	(°C)	(°C)	(A)	(V)					
XM3	125	121 ± 2	100	200	3	AC 300	○	○	○	●	●
						AC 320	●	●	○	○	●
XM4	130	125 ± 2	106	200	3	AC 300	●	●	●	●	●
						AC 320	●	●	○	○	●
XM5	135	130 ± 2	111	200	3	AC 300	●	●	●	●	●
						AC 320	●	●	○	○	●
XM7	150	145 ± 2	126	200	3	AC 300	●	●	●	●	●
						AC 320	●	●	○	○	●

Note:
"●" Means certificated.
"○" Means non-certificated.

All Rights Reserved by Xiamen SET Electronics Co., Ltd. 2021-2023 V2.3

Packaging Information

Bulk

Item	PE Bag	PE Bag	Carton
Dimensions (mm)	135 × 85	190 × 180	440 × 300 × 260
Quantity (PCS)	100	1000	50000
Gross Weight (kg)			21.0± 10%

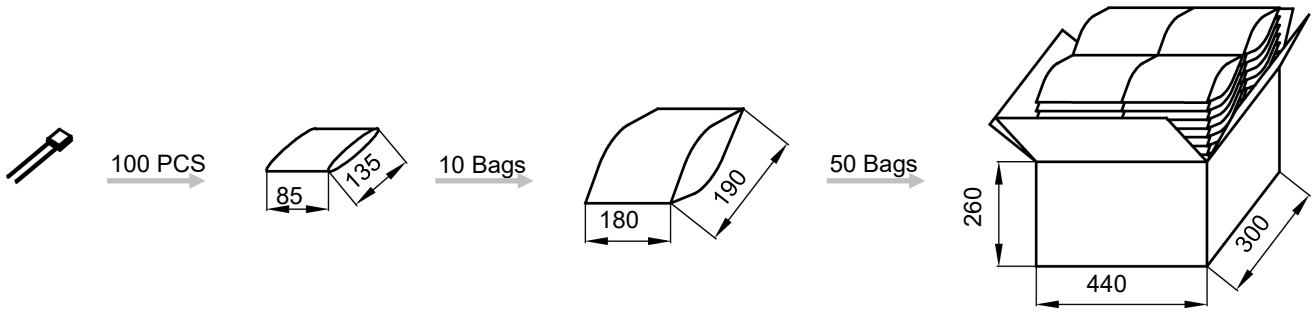

Taping

Item	Box	Carton
Dimensions (mm)	328 × 200 × 70	480 × 340 × 220
Quantity (PCS)	2000	12000
Gross Weight (kg)		6.5 ± 10%

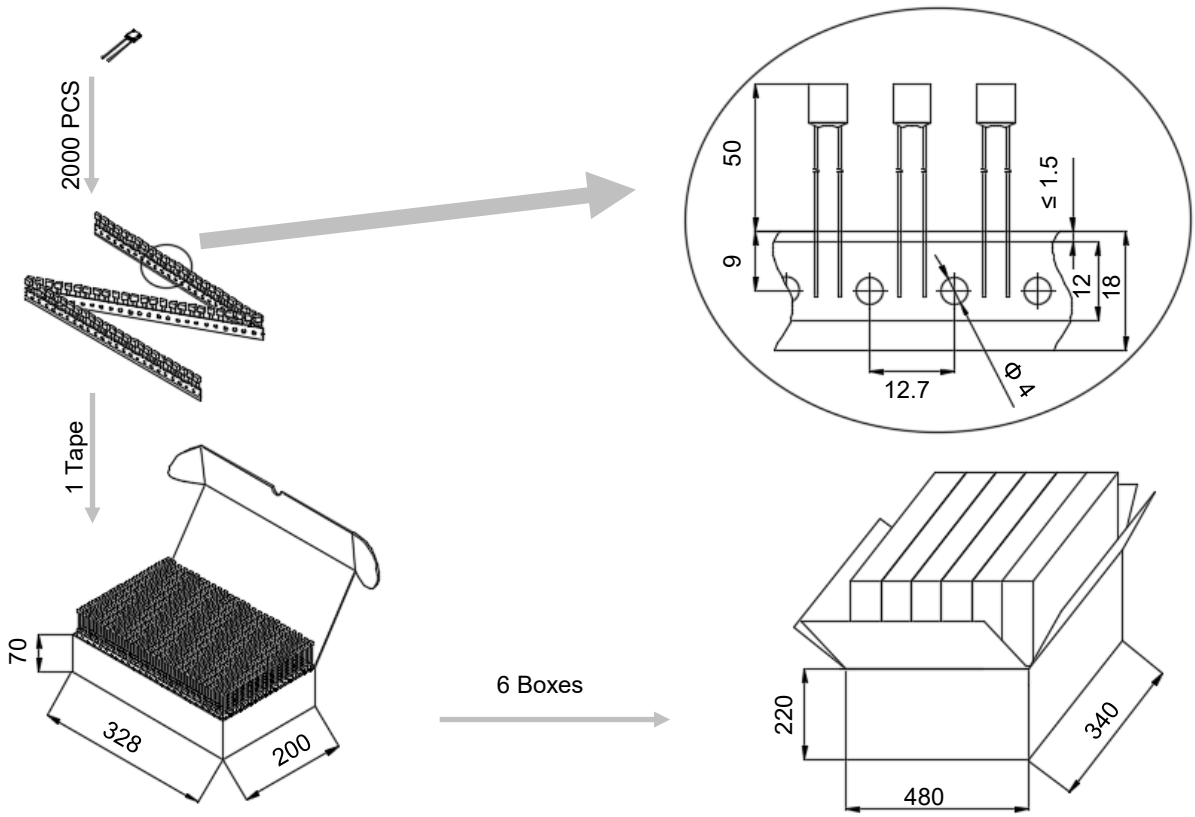

All Rights Reserved by Xiamen SET Electronics Co., Ltd. 2021-2023 V2.3

Product Temp.-Time Curve (For Reference Only)

The Temp.-Time Curve of Thermal-Link in different Temp. oil baths.

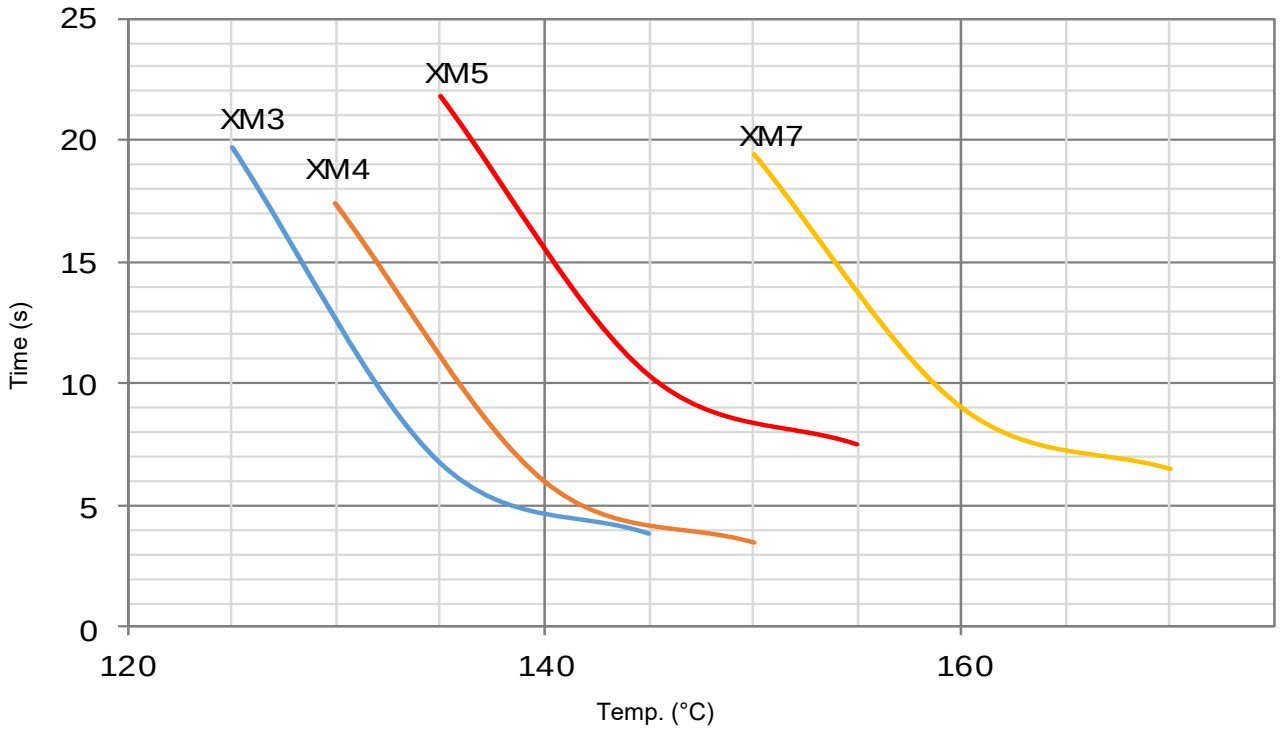

Product Current-Time Curve (For Reference Only)

The Current-Time Curve shows functioning time at multi-times rated current at room temperature 25 ± 2 °C.

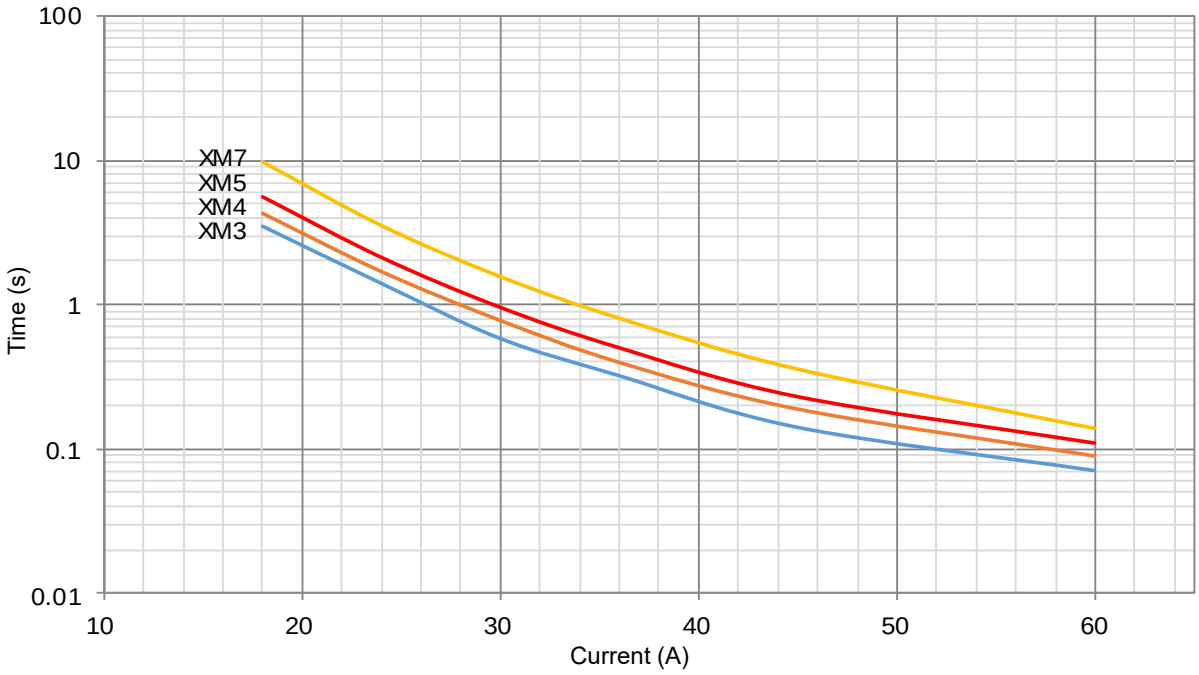

All Rights Reserved by Xiamen SET Electronics Co., Ltd. 2021-2023 V2.3

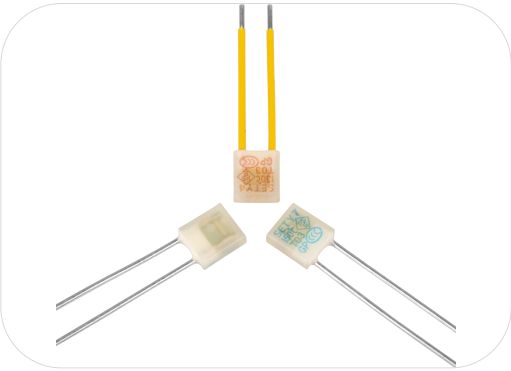

Applications

- Lamps
- Switched-Mode Power Supplies
- Home Electrical Appliances
- Power Strips
- Batteries

Features

- High Accuracy of Functioning Temp.
- Non-Resettable
- RoHS & REACH Compliant

Customization

- Temp.
- The Length of Lead Wires
- Taping Packing Available
- Lead Wires can be Insulated
- Tinned Copper Wires or CP Wires

ATCO

Agency Approvals

Agency Mark	Standards	No.
	UL 60691	E214712
	CAN-CSA-E60691	E214712
	EN 60691	R50408477
	EN 60691	40017057
	J60691	PSE16021063、PSE16021064 PSE16021065、PSE16021066 PSE16021067、PSE16021068
	K60691	SU05023-6002A、SU05023-6003B
	GB 9816.1	2020980205000188

Dimensions (mm)

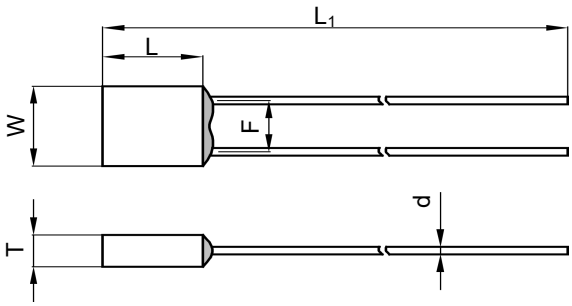

L	L_1	W	T	d	F
7.0 ± 0.5	70.0 ± 3.0	6.6 ± 0.5	2.7 ± 0.2	0.80 ± 0.05	4.0 ± 0.5

All Rights Reserved by Xiamen SET Electronics Co., Ltd. 2021-2023 V2.3

Specifications

Model	T_f	Fusing Temp.	T_h	T_m	I_r	U_r	I_n 8 / 20 μs (15 Times)	I_{max} 8 / 20 μs (1 Time)	UL	cUL	TUV	VDE	PSE	KTL	CCC	RoHS REACH
	(°C)	(°C)	(°C)	(°C)	(A)	(V)	(kA)	(kA)								
Y0	76	73 ± 2	53	200	5	AC 250	2	4	●	●	●	○	●	○	●	●
Y18	86	81 ± 2	61	200	5	AC 250	2	4	●	●	●	○	●	○	●	●
Y1	102	98 ± 2	77	200	5	AC 250	2	4	●	●	●	○	●	●	●	●
Y2	115	111 ± 2	89	200	5	AC 250	3	6	●	●	○	●	●	●	●	●
Y3	125	121 ± 2	98	200	5	AC 250	3	6	●	●	○	●	●	●	●	●
Y4	130	125 ± 2	103	200	5	AC 250	3	6	●	●	●	●	●	●	●	●
						AC 300	3	6	●	●	●	○	○	○	○	●
Y8	133	130 ± 2	108	200	5	AC 250	3	6	●	●	○	●	●	●	●	●
Y9	136	131 ± 2	111	200	5	AC 250	3	6	●	●	●	●	●	●	●	●
						AC 300	3	6	●	●	●	○	○	○	○	●
Y6	145	140 ± 2	118	200	5	AC 250	3	6	●	●	○	○	●	○	○	●
Y7	150	145 ± 2	123	200	5	AC 250	3	6	●	●	●	●	●	●	●	●
						AC 300	3	6	●	●	●	○	○	○	○	●
Y16	160	154 ± 2	133	200	5	AC 250	3.5	7	○	○	○	○	●	○	●	●
Y17	187	182 ± 3	160	200	5	AC 250	3.5	7	○	○	●	○	○	○	○	●

Note:

"● "Means certificated.

"○ "Means non-certificated.

All Rights Reserved by Xiamen SET Electronics Co., Ltd. 2021-2023 V2.3

Packaging Information

Bulk

Item	PE Bag	PE Bag	Carton
Dimensions (mm)	135 × 85	190 × 180	440 × 300 × 260
Quantity (PCS)	100	1000	25000
Gross Weight (kg)			17.0 ± 10%

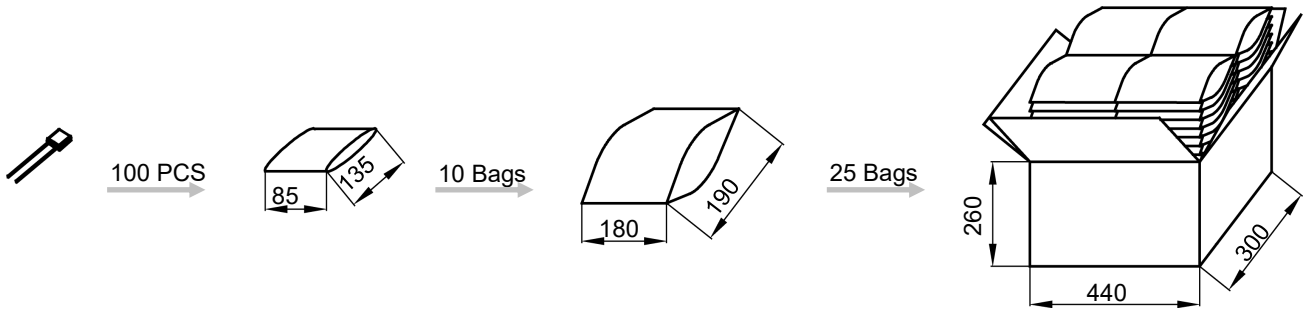

Taping

Item	Box	Carton
Dimensions (mm)	328 × 200 × 70	480 × 340 × 220
Quantity (PCS)	2000	12000
Gross Weight (kg)		9.0 ± 10%

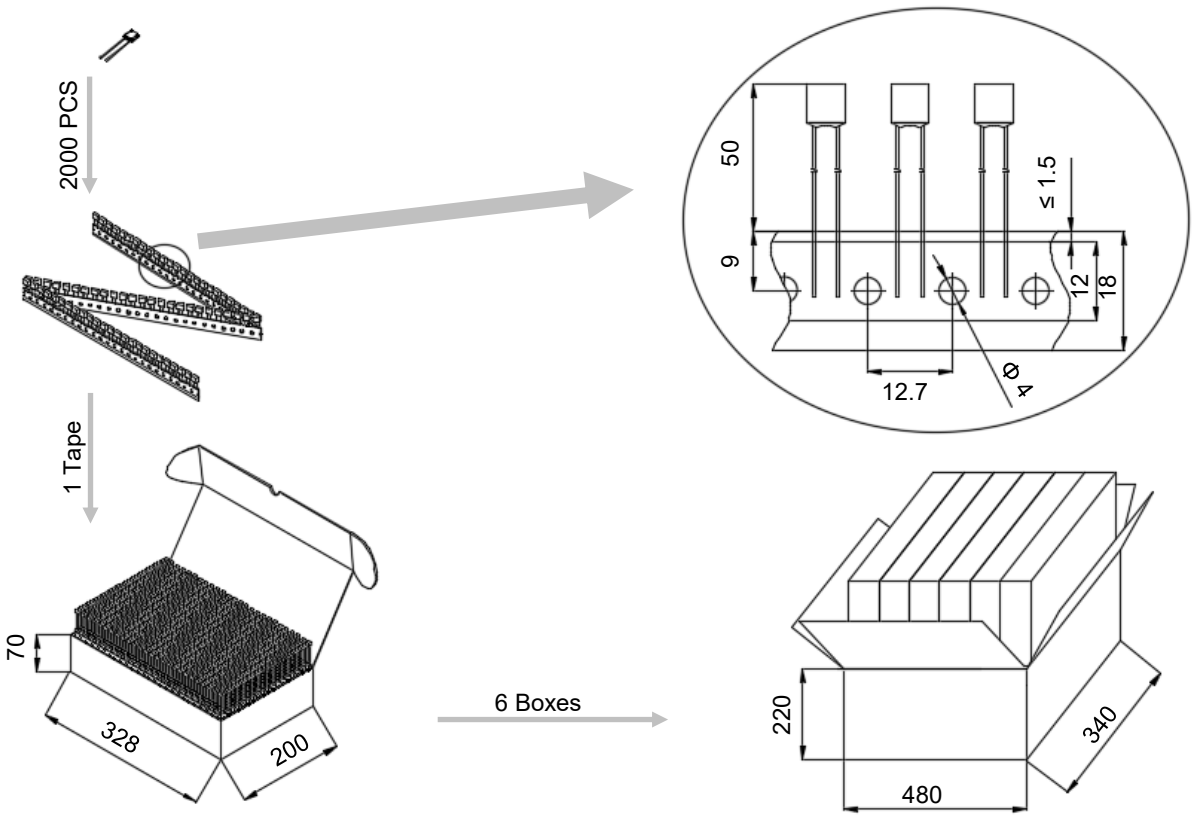

All Rights Reserved by Xiamen SET Electronics Co., Ltd. 2021-2023 V2.3

Product Temp.-Time Curve (For Reference Only)

The Temp.-Time Curve of Thermal-Link in different Temp. oil baths.

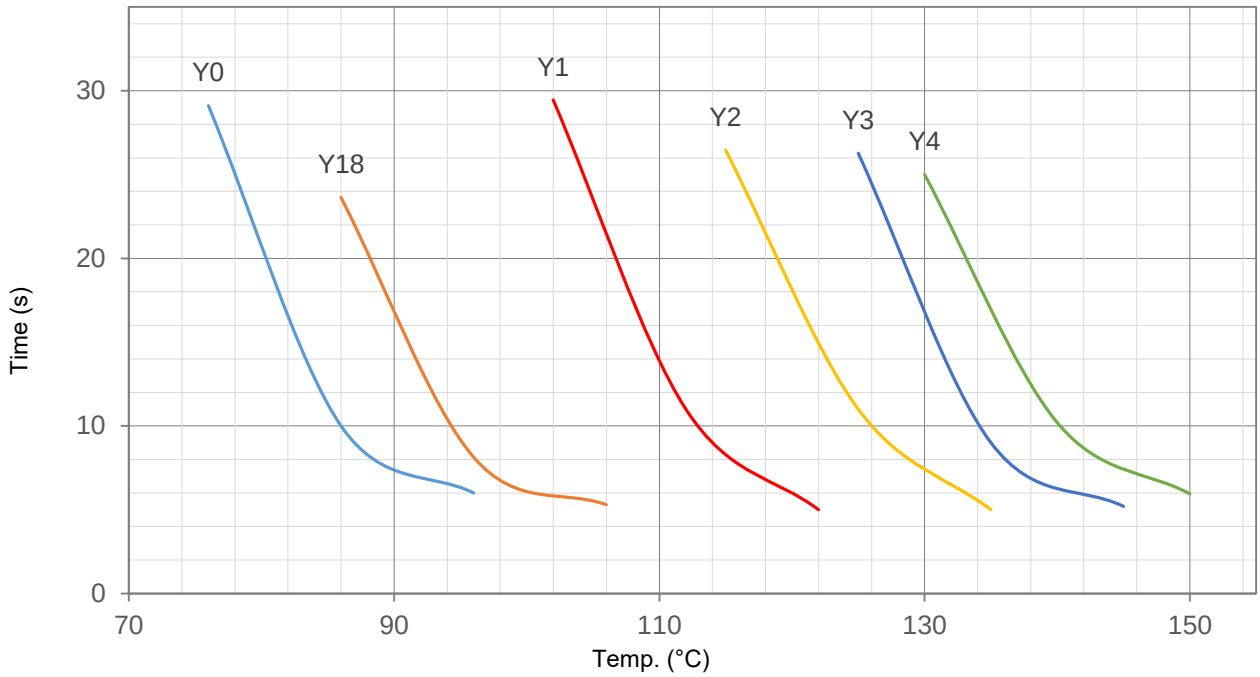

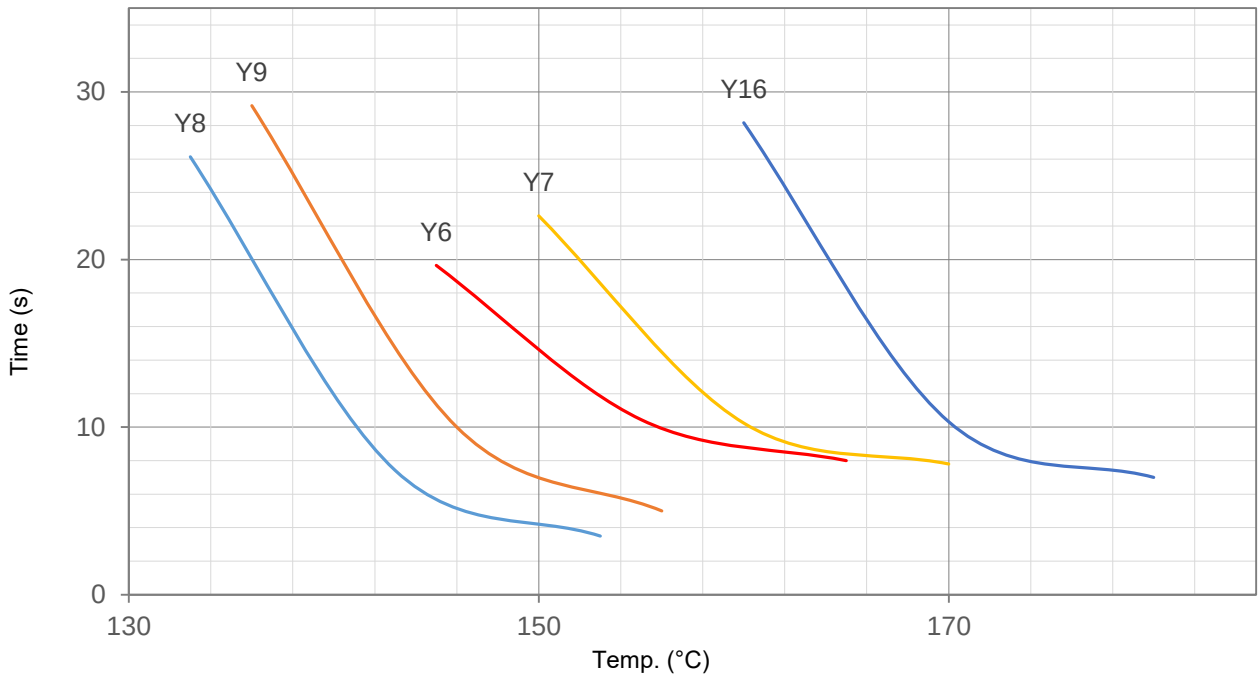

All Rights Reserved by Xiamen SET Electronics Co., Ltd. 2021-2023 V2.3

Product Current-Time Curve (For Reference Only)

The Current-Time Curve shows functioning time at multi-times rated current at room temperature 25 ± 2 °C.

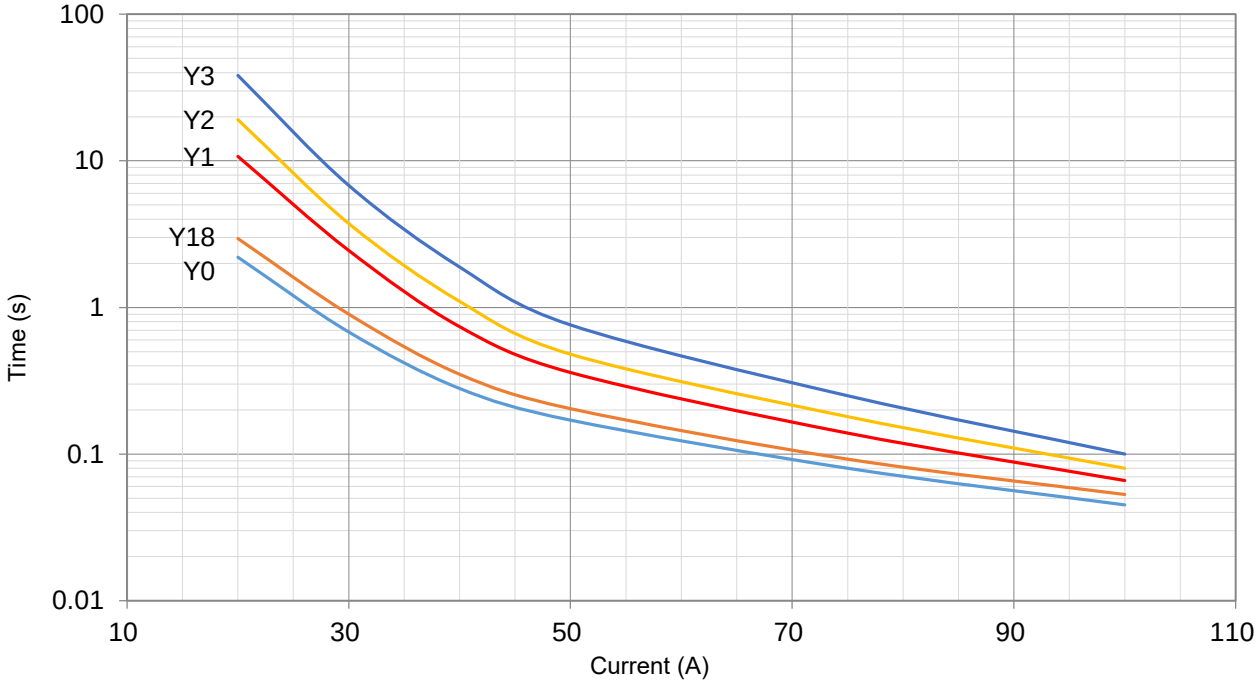

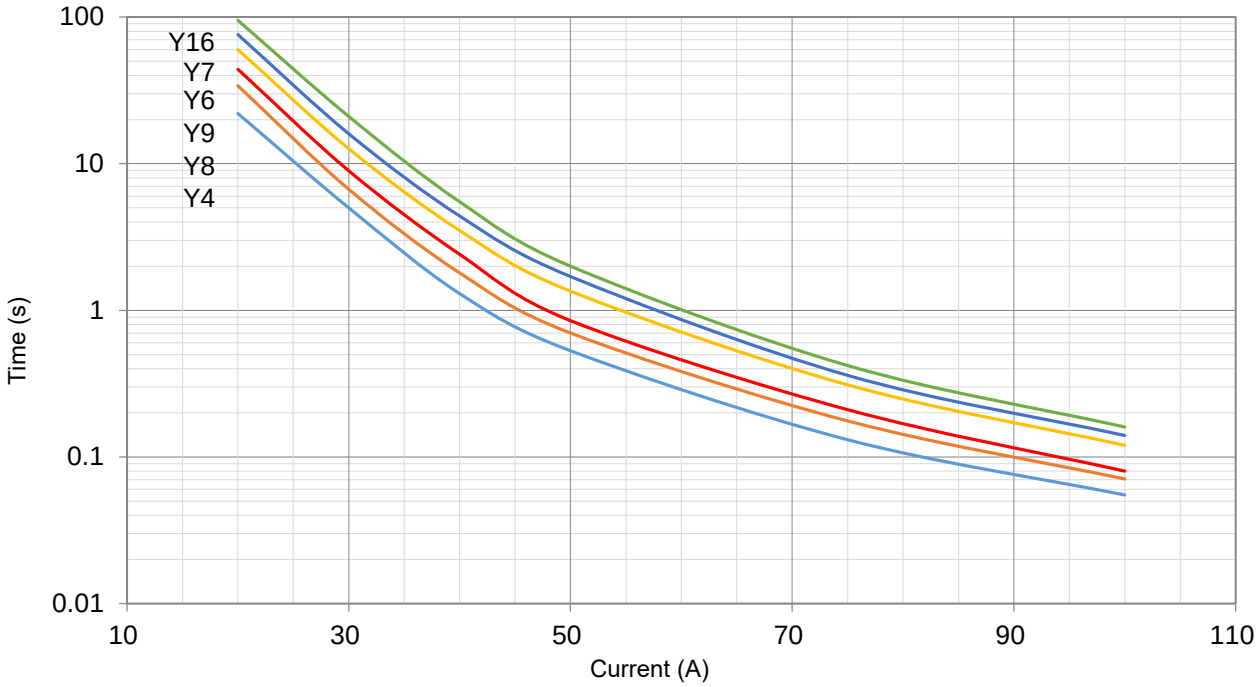

All Rights Reserved by Xiamen SET Electronics Co., Ltd. 2021-2023 V2.3

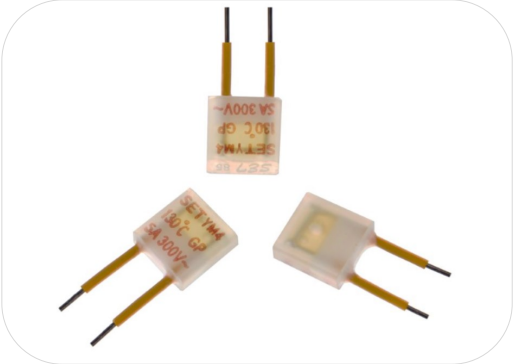

Applications

- Lamps
- Switched-Mode Power Supplies
- Home Electrical Appliances
- Power Strips
- Batteries

Features

- High Accuracy of Functioning Temp.
- Non-Resettable
- Rated Voltage 300 VAC
- RoHS & REACH Compliant

Customization

- Temp.
- The Length of Lead Wires
- Taping Packing Available
- Lead Wires can be Insulated
- Tinned Copper Wires or CP Wires

Agency Approvals

Agency Mark	Standards	No.
	UL 60691	E214712
	CAN-CSA-E60691	E214712
	EN 60691	R50408477

Dimensions (mm)

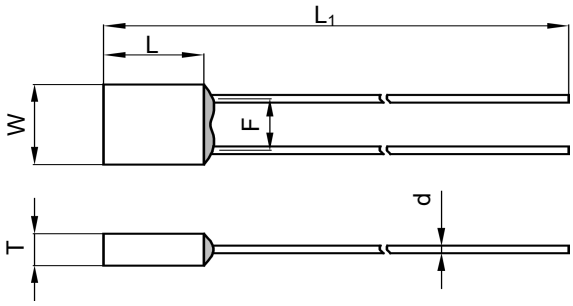

L	L_1	W	T	d	F
7.0 ± 0.5	50.0 ± 2.0	6.6 ± 0.5	2.7 ± 0.2	0.80 ± 0.05	4.0 ± 0.5

All Rights Reserved by Xiamen SET Electronics Co., Ltd. 2021-2023 V2.3

Specifications

Model	T_f	Fusing Temp.	T_h	T_m	I_r	U_r	I_n 8 / 20 μs (15 Times)	I_{max} 8 / 20 μs (1 Time)	UL	cUL	TUV	RoHS REACH
	(°C)	(°C)	(°C)	(°C)	(A)	(V)	(kA)	(kA)				
YM4	130	125 ± 2	103	200	5	AC 300	3	6	●	●	●	●
YM9	136	131 ± 2	111	200	5	AC 300	3	6	●	●	●	●
YM7	150	145 ± 2	123	200	5	AC 300	3	6	●	●	●	●

Note:

"● "Means certificated.

"○ "Means non-certificated.

All Rights Reserved by Xiamen SET Electronics Co., Ltd. 2021-2023 V2.3

Packaging Information

Bulk

Item	PE Bag	PE Bag	Carton
Dimensions (mm)	135 × 85	190 × 180	440 × 300 × 260
Quantity (PCS)	100	1000	25000
Gross Weight (kg)			15.0 ± 10%

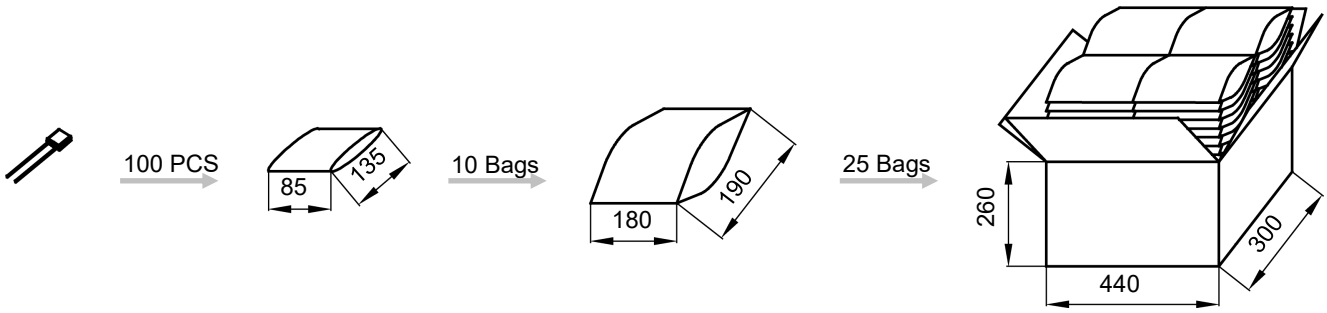

Taping

Item	Box	Carton
Dimensions (mm)	328 × 200 × 70	480 × 340 × 220
Quantity (PCS)	2000	12000
Gross Weight (kg)		8.0 ± 10%

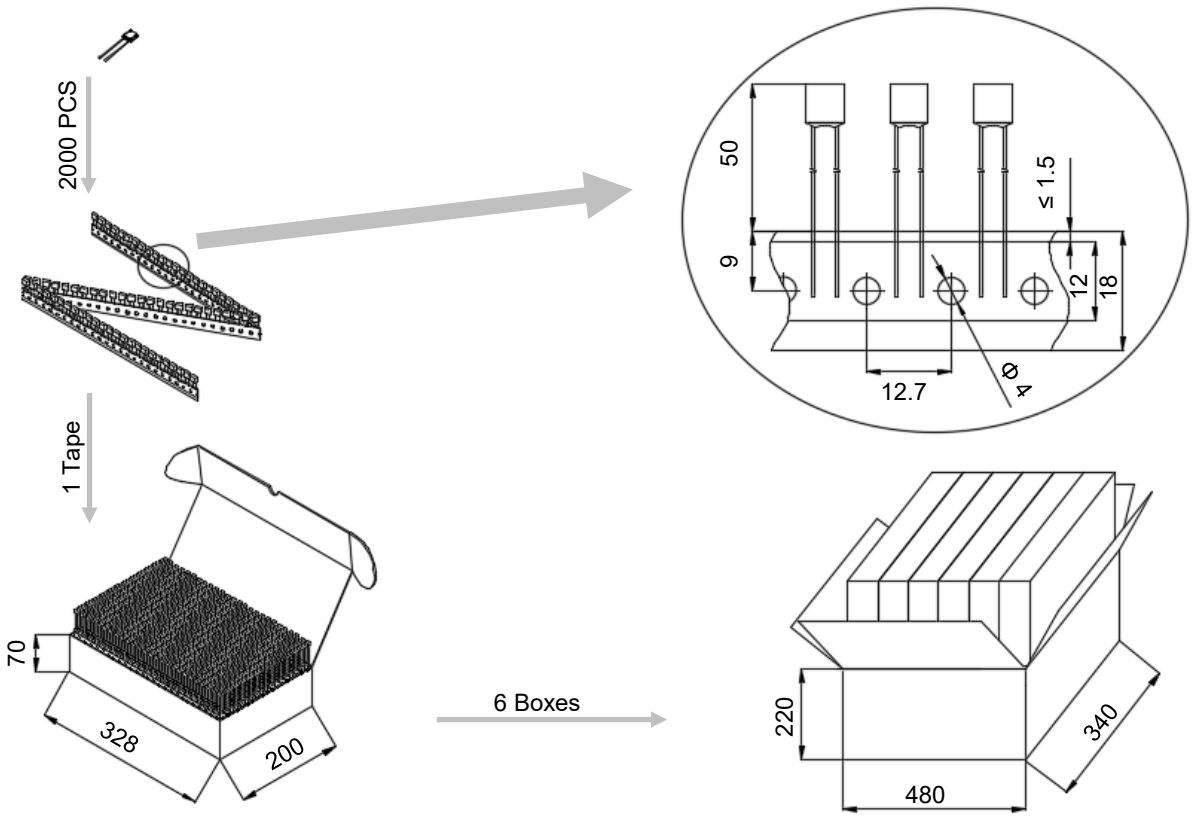

All Rights Reserved by Xiamen SET Electronics Co., Ltd. 2021-2023 V2.3

Product Temp.-Time Curve (For Reference Only)

The Temp.-Time Curve of Thermal-Link in different Temp. oil baths.

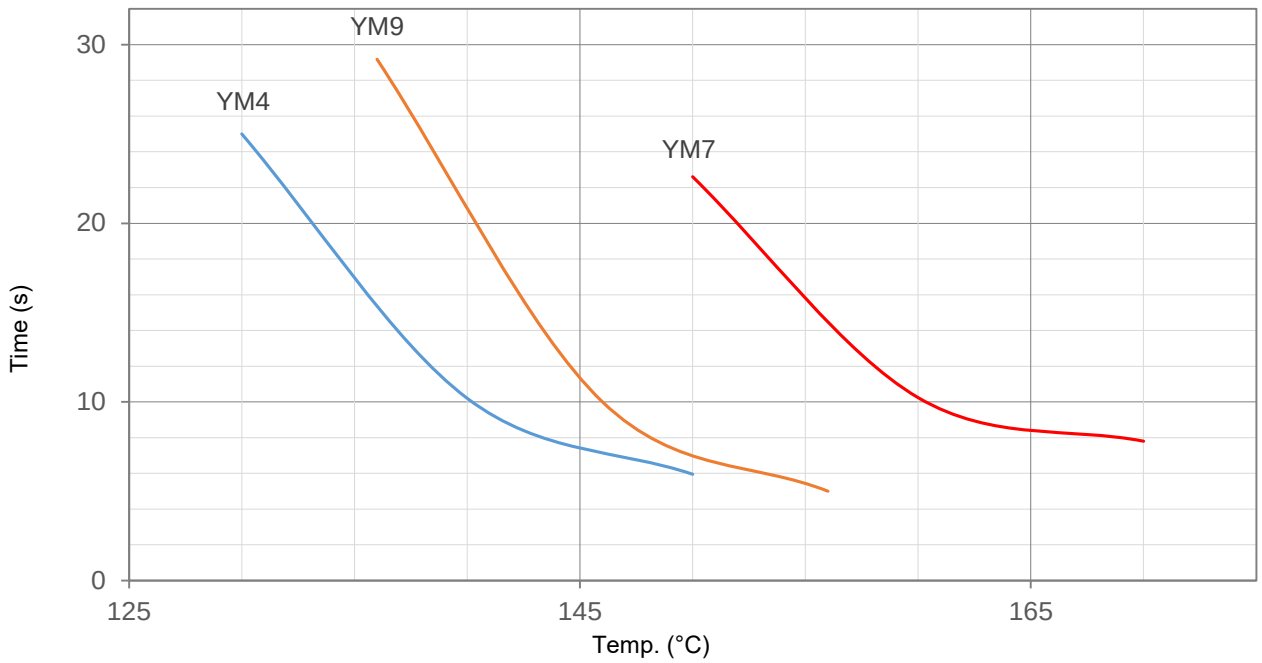

Product Current-Time Curve (For Reference Only)

The Current-Time Curve shows functioning time at multi-times rated current at room temperature 25 ± 2 °C.

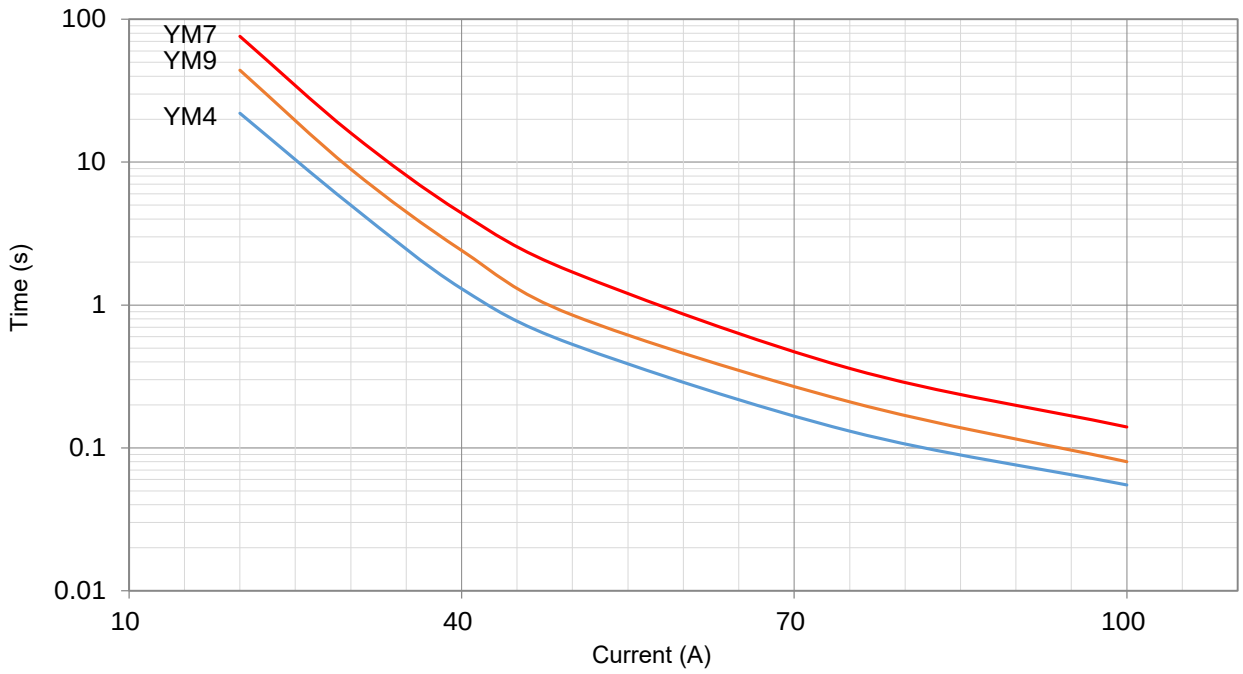

All Rights Reserved by Xiamen SET Electronics Co., Ltd. 2021-2023 V2.3

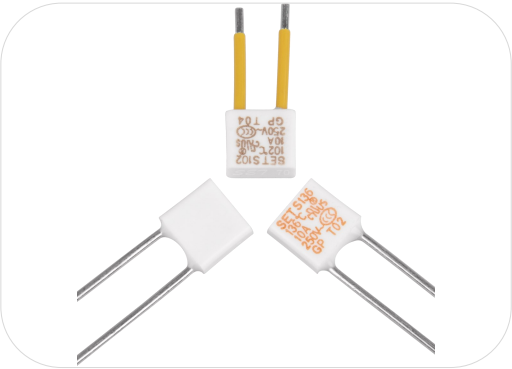

Applications

- Lamps
- Switched-Mode Power Supplies
- Home Electrical Appliances
- Power Strips
- Batteries
- Surge Protective Devices

Features

- High Accuracy of Functioning Temp.
- Non-Resettable
- High Surge Capacity
- RoHS & REACH Compliant

Customization

- Temp.
- The Length of Lead Wires
- Taping Packing Available
- Lead Wires can be Insulated

Agency Approvals

Agency Mark	Standards	No.
	UL 60691	E214712
	CAN-CSA-E60691	E214712
	EN 60691	R50497013
	EN 60691	40018082
	J60691	PSE16021061、PSE16021062
	GB 9816.1	2020980205000189

Dimensions (mm)

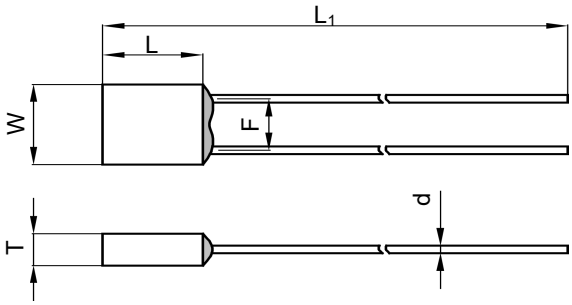

L	L_1	W	T	d	F
7.5 ± 0.5	35.0 ± 2.0	8.3 ± 0.5	3.4 ± 0.2	1.05 ± 0.05	5.2 ± 0.5

All Rights Reserved by Xiamen SET Electronics Co., Ltd. 2021-2023 V2.3

Specifications

Model	T_f	Fusing Temp.	T_h	T_m	I_r	U_r	I_n 8 / 20 μs (15 Times)	I_{max} 8 / 20 μs (1 Time)	UL	cUL	TUV	VDE	PSE	CCC	RoHS, REACH
	(°C)	(°C)	(°C)	(°C)	(A)	(V)	(kA)	(kA)							
S102	102	98 ± 2	72 61[a]	200	10	AC 250	5	10	●	●	○	●	●	●	●
						AC 125			●	●					●
						DC 100			●	●					●
S115	115	111 ± 2	85 73[a]	200	10	AC 250	5	10	●	●	○	●	●	●	●
						AC 125			●	●					●
						DC 100			●	●					●
S125	125	121 ± 2	95	200	10	AC 250	5	10	○	○	●	○	○	●	●
S136	136	131 ± 2	106 101[a]	200	10	AC 250	5	10	●	●	○	●	●	●	●
						AC 125			●	●					●
						DC 100			●	●					●
S150	150	145 ± 2	118	200	10	AC 250	5	10	●	●	●	○	○	○	●
						AC 125			●	●					●
						DC 100			●	●					●

a: VDE standard upgrade requirements, holding temperature (T_h) is defined as the inside environment temperature of test equipment cavity, the previous temperature measurement point is the product shell temperature.

Note:
"●"Means certificated.
"○"Means non-certificated.

All Rights Reserved by Xiamen SET Electronics Co., Ltd. 2021-2023 V2.3

Packaging Information

Bulk

Item	PE Bag	PE Bag	Carton
Dimensions (mm)	135 × 85	190 × 180	440 × 300 × 260
Quantity (PCS)	50	500	20000
Gross Weight (kg)			17 ± 10%

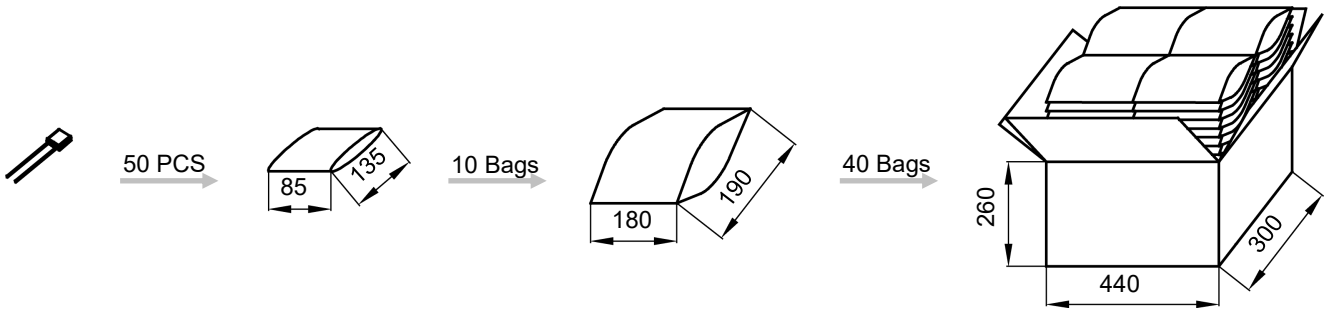

Taping

Item	Box	Carton
Dimensions (mm)	328 × 200 × 70	480 × 340 × 220
Quantity (PCS)	2000	12000
Gross Weight (kg)		12 ± 10%

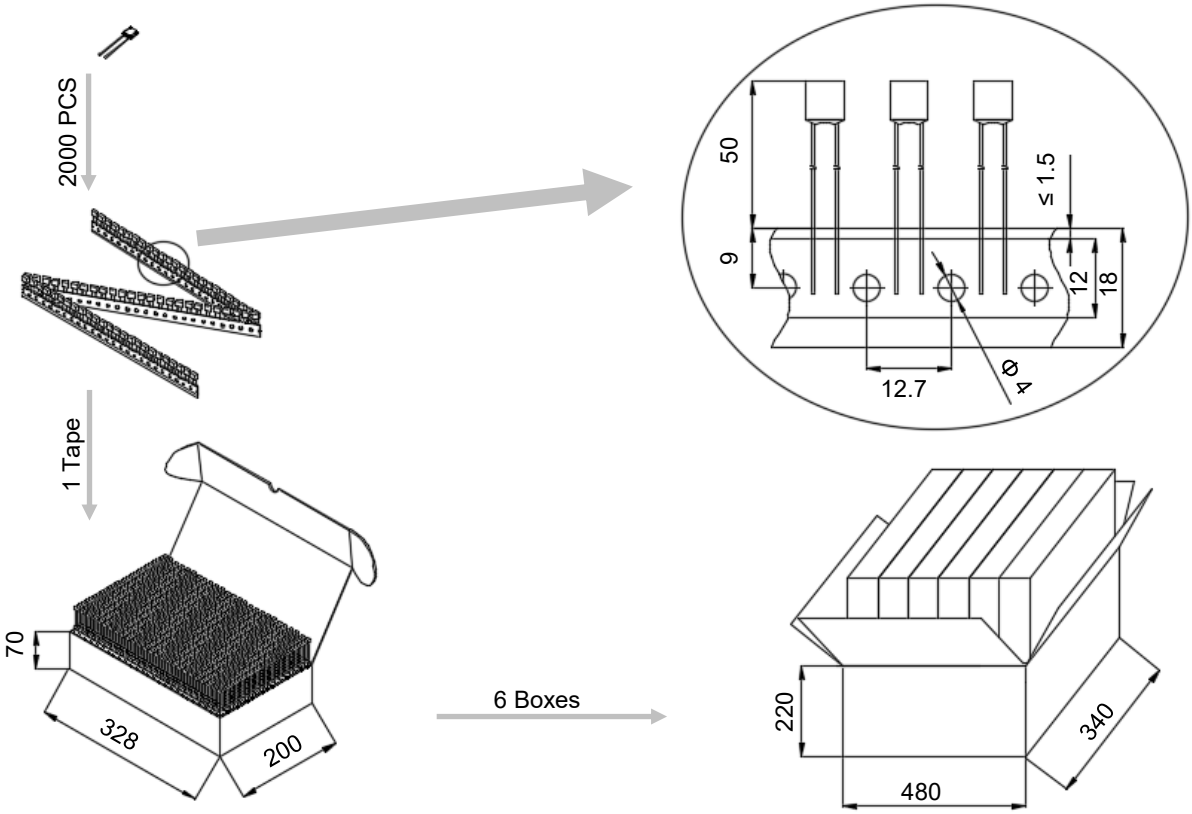

All Rights Reserved by Xiamen SET Electronics Co., Ltd. 2021-2023 V2.3

Product Temp.-Time Curve (For Reference Only)

The Temp.-Time Curve of Thermal-Link in different Temp. oil baths.

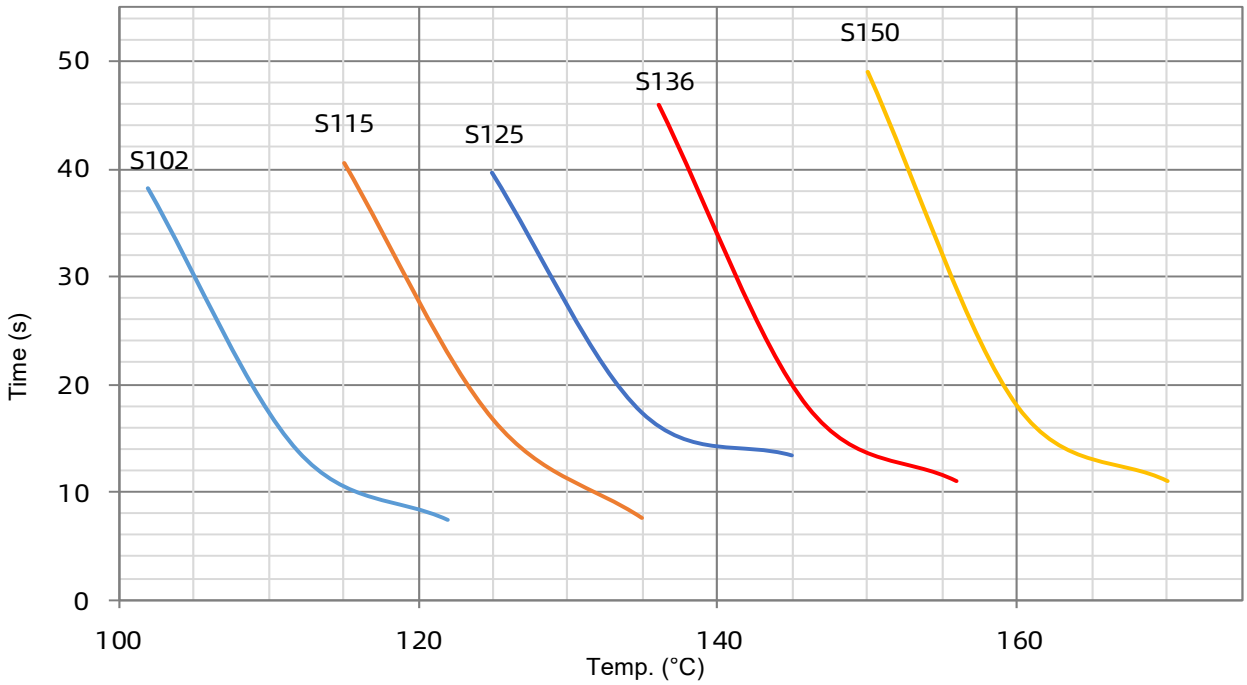

Product Current-Time Curve (For Reference Only)

The Current-Time Curve shows functioning time at multi-times rated current at room temperature 25 ± 2 °C.

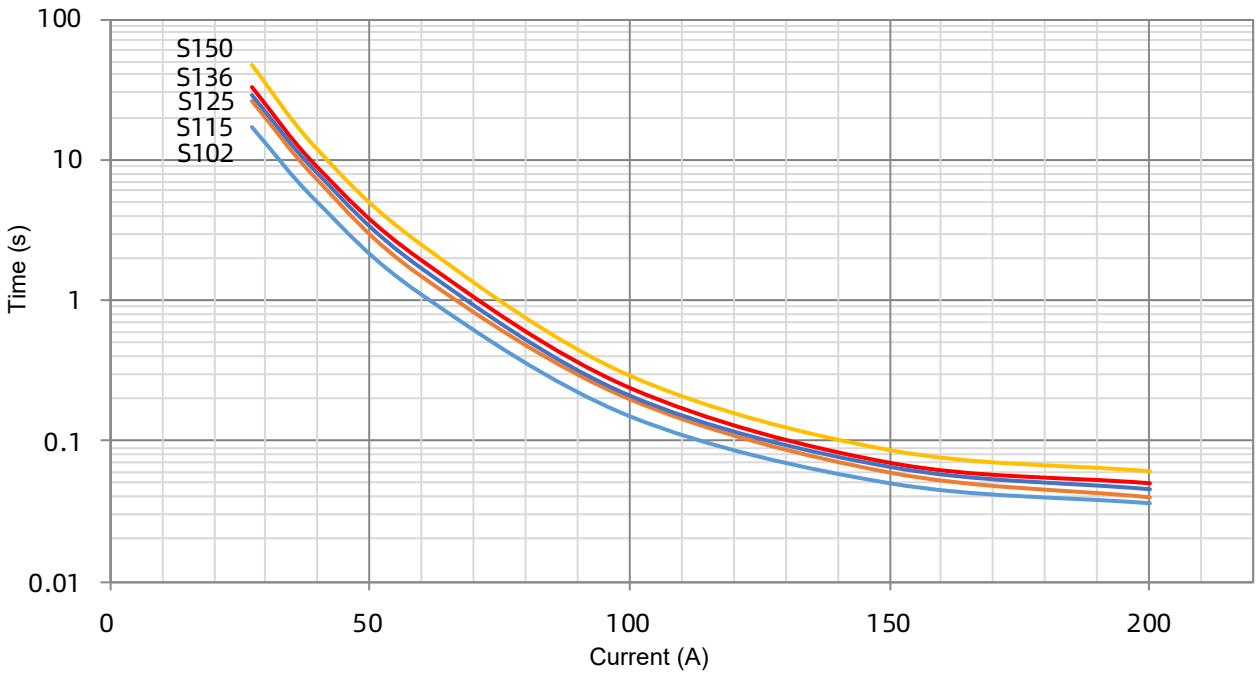

All Rights Reserved by Xiamen SET Electronics Co., Ltd. 2021-2023 V2.3

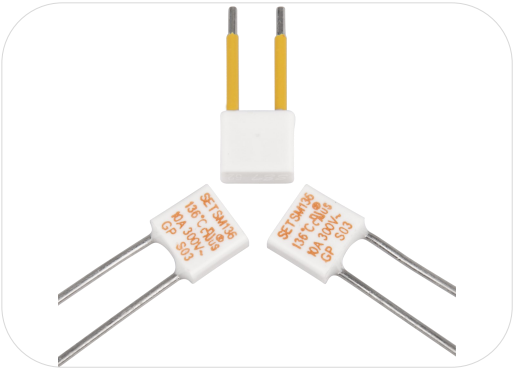

Applications

- Lamps
- Switched-Mode Power Supplies
- Home Electrical Appliances
- Power Strips
- Batteries
- Surge Protective Devices

Features

- High Accuracy of Functioning Temp.
- Non-Resettable
- High Surge Capacity
- RoHS & REACH Compliant

Customization

- Temp.
- The Length of Lead Wires
- Taping Packing Available
- Lead Wires can be Insulated

Agency Approvals

Agency Mark	Standards	No.
	UL 60691	E214712
	CAN-CSA-E60691	E214712
	EN 60691	R50388886

Dimensions (mm)

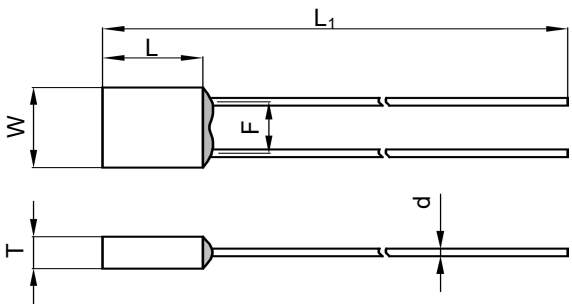

L	L_1	W	T	d	F
7.5 ± 0.5	35.0 ± 2.0	8.3 ± 0.5	3.4 ± 0.2	1.05 ± 0.05	5.2 ± 0.5

All Rights Reserved by Xiamen SET Electronics Co., Ltd. 2021-2023 V2.3

Specifications

Model	T_f	Fusing Temp.	T_h	T_m	I_r	U_r	I_n 8 / 20 μs (15 Times)	I_m 8 / 20 μs (1 Time)				RoHS REACH
	(°C)	(°C)	(°C)	(°C)	(A)	(V)	(kA)	(kA)	UL	cUL	TUV	
SM102	102	98 ± 2	72	200	10	AC 300	5	10	●	●	●	●
SM115	115	111 ± 2	85	200	10	AC 300	5	10	●	●	●	●
SM136	136	131 ± 2	106	200	10	AC 300	5	10	●	●	●	●
SM150	150	145 ± 2	118	200	10	AC 300	5	10	●	●	●	●

Note:

"● "Means certificated.

"○ "Means non-certificated.

All Rights Reserved by Xiamen SET Electronics Co., Ltd. 2021-2023 V2.3

Packaging Information

Bulk

Item	PE Bag	PE Bag	Carton
Dimensions (mm)	135 × 85	190 × 180	440 × 300 × 260
Quantity (PCS)	50	500	20000
Gross Weight (kg)			17.0 ± 10%

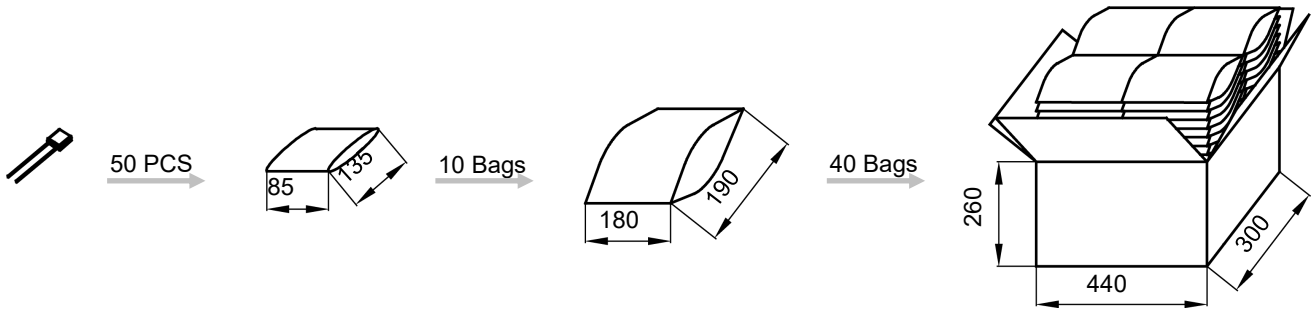

Taping

Item	Box	Carton
Dimensions (mm)	328 × 200 × 70	480 × 340 × 220
Quantity (PCS)	2000	12000
Gross Weight (kg)		12.0 ± 10%

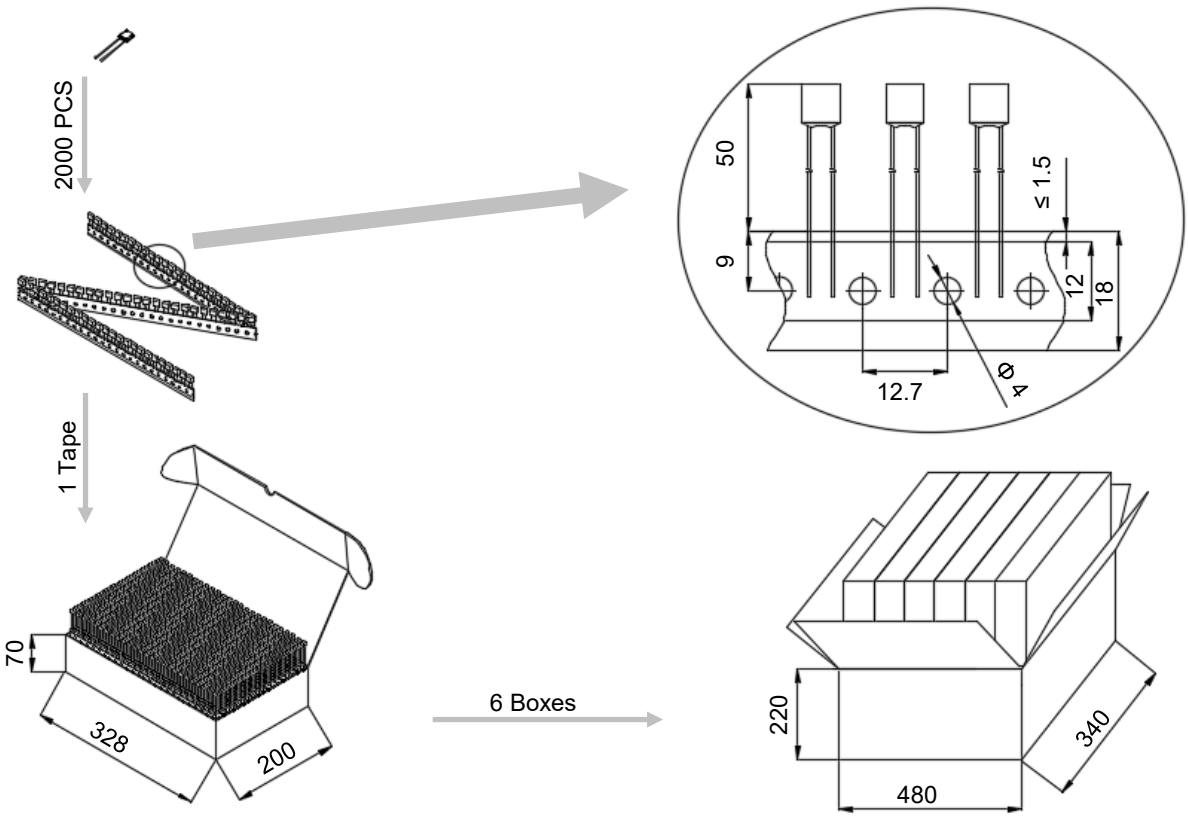

All Rights Reserved by Xiamen SET Electronics Co., Ltd. 2021-2023 V2.3

Product Temp.-Time Curve (For Reference Only)

The Temp.-Time Curve of Thermal-Link in different Temp. oil baths.

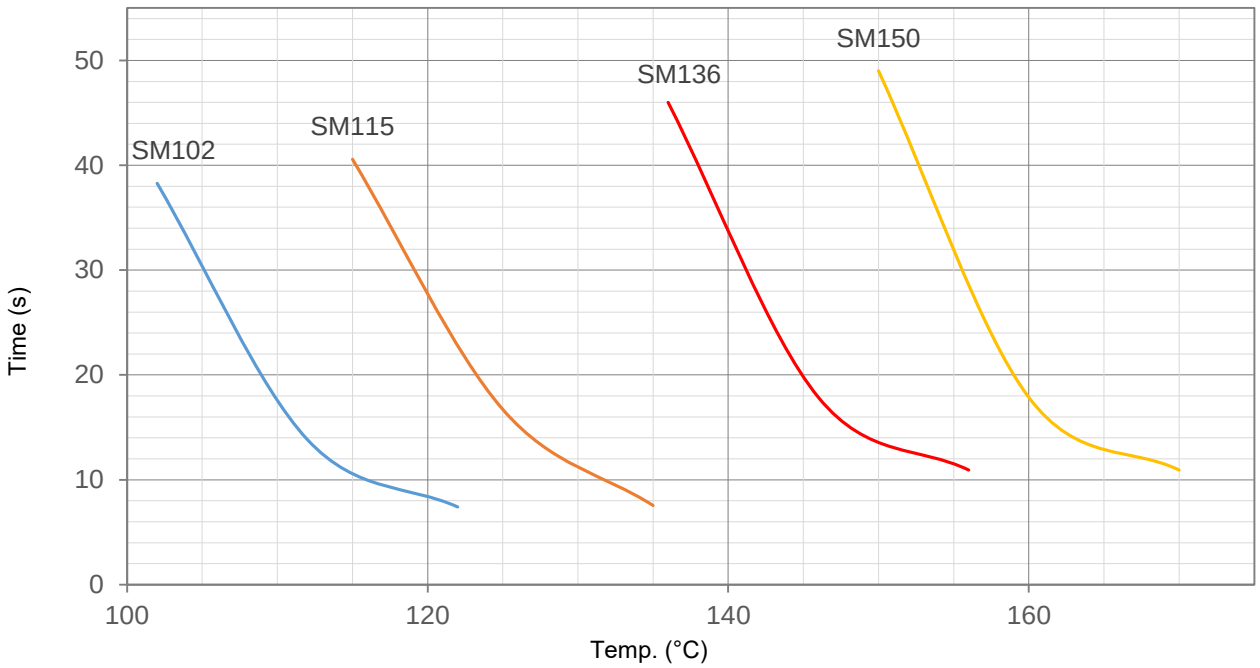

Product Current-Time Curve (For Reference Only)

The Current-Time Curve shows functioning time at multi-times rated current at room temperature 25 ± 2 °C.

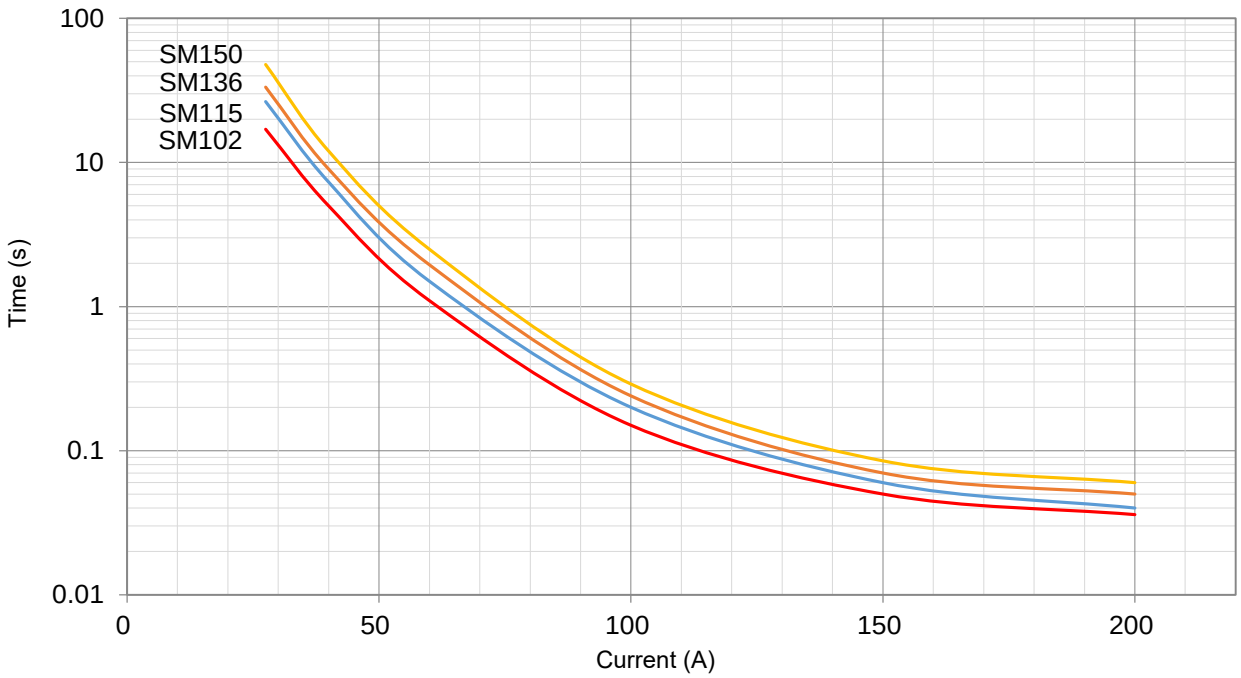

All Rights Reserved by Xiamen SET Electronics Co., Ltd. 2021-2023 V2.3

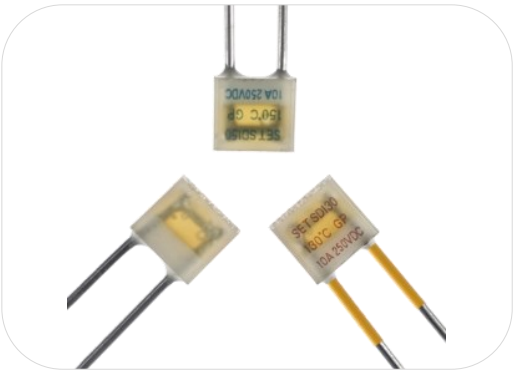

Applications

- Switched-Mode Power Supplies
- Batteries
- Surge Protective Devices

Features

- High Accuracy of Functioning Temp.
- Non-Resettable
- RoHS & REACH Compliant

Customization

- Temp.
- The Length of Lead Wires
- Taping Packing Available
- Lead Wires can be Insulated

ATCO

Dimensions (mm)

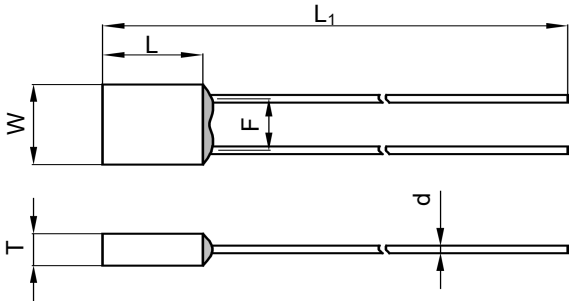

L	L_1	W	T	d	F
7.5 ± 0.5	50.0 ± 2.0	8.6 ± 0.5	3.6 ± 0.2	1.05 ± 0.05	5.2 ± 0.5

All Rights Reserved by Xiamen SET Electronics Co., Ltd. 2021-2023 V2.3

Specifications

Model	T_f	Fusing Temp.	T_h	T_m	I_r	U_r	RoHS REACH
	(°C)	(°C)	(°C)	(°C)	(A)	(V)	
SD102	102	98 ± 2	72	160	10	DC 125	●
SD115	115	111 ± 2	85	160	10	DC 125	●
SD125	125	121 ± 2	95	160	10	DC 125	●
SD130	130	125 ± 2	100	160	10	DC 125	●
SD136	136	131 ± 2	106	160	10	DC 125	●
SD150	150	145 ± 2	120	160	10	DC 125	●

Note:
"● "Means certificated.
"○ "Means non-certificated.

ATCO

All Rights Reserved by Xiamen SET Electronics Co., Ltd. 2021-2023 V2.3

Packaging Information

Bulk

Item	PE Bag	PE Bag	Carton
Dimensions (mm)	135 × 85	190 × 180	440 × 300 × 260
Quantity (PCS)	50	500	20000
Gross Weight (kg)			22.0 ± 10%

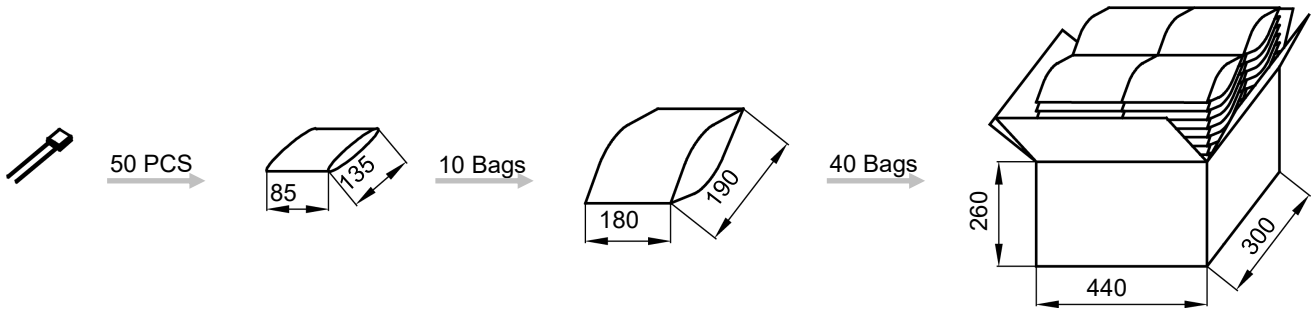

Taping

Item	Box	Carton
Dimensions (mm)	328 × 200 × 70	480 × 340 × 220
Quantity (PCS)	2000	12000
Gross Weight (kg)		14.0 ± 10%

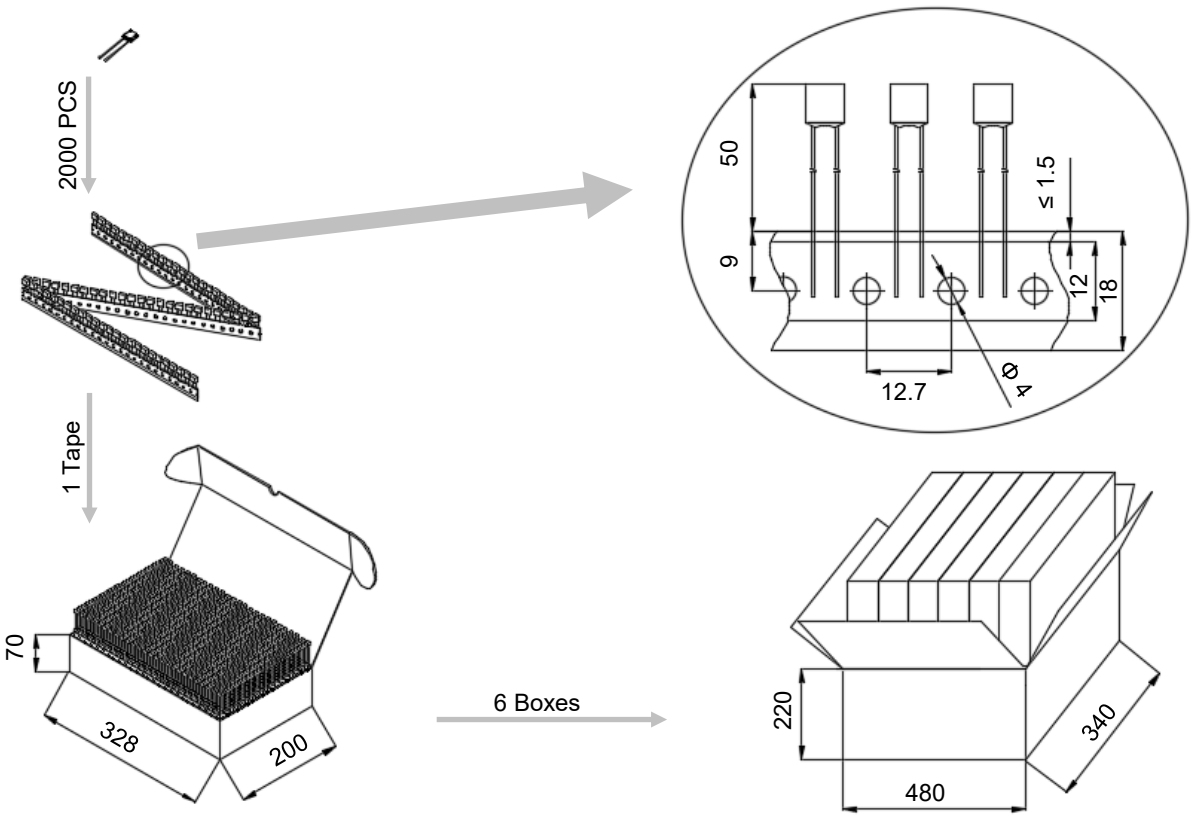

All Rights Reserved by Xiamen SET Electronics Co., Ltd. 2021-2023 V2.3

Product Temp.-Time Curve (For Reference Only)

The Temp.-Time Curve of Thermal-Link in different Temp. oil baths.

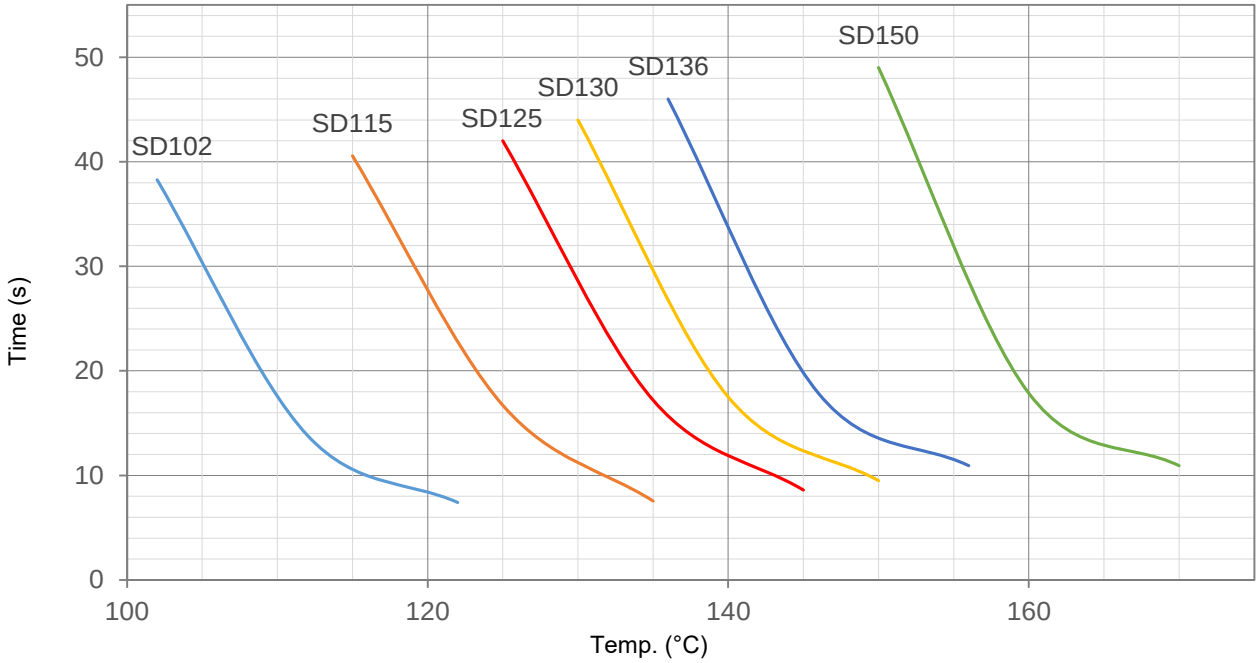

Product Current-Time Curve (For Reference Only)

The Current-Time Curve shows functioning time at multi-times rated current at room temperature 25 ± 2 °C.

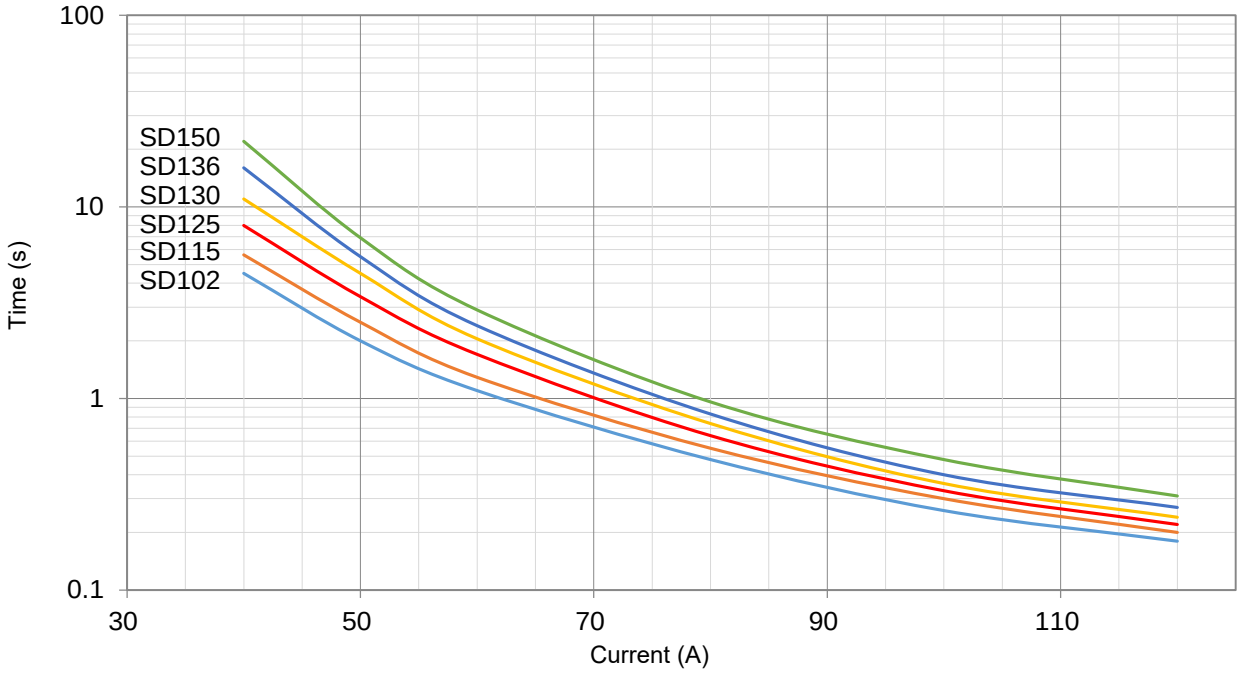

All Rights Reserved by Xiamen SET Electronics Co., Ltd. 2021-2023 V2.3

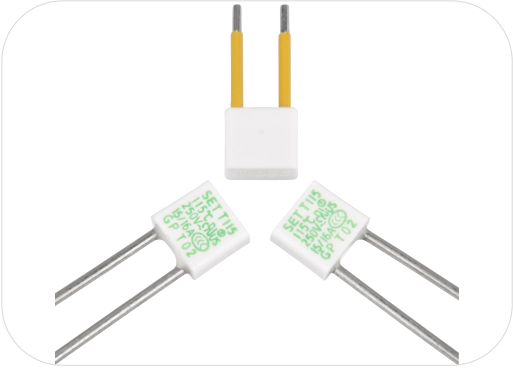

Applications

- Lamps
- Switched-Mode Power Supplies
- Home Electrical Appliances
- Power Strips
- Batteries
- Surge Protective Devices

Features

- High Accuracy of Functioning Temp.
- Non-Resettable
- High Surge Capacity
- RoHS & REACH Compliant

Customization

- Temp.
- The Length of Lead Wires
- Taping Packing Available
- Lead Wires can be Insulated

ATCO

Agency Approvals

Agency Mark	Standards	No.
	UL 60691	E214712
	CAN-CSA-E60691	E214712
	EN 60691	R50497013
	EN 60691	40018082
	J60691	PSE16021059、PSE16021060 PSE16021061、PSE16021062
	GB 9816.1	2020980205000189

Dimensions (mm)

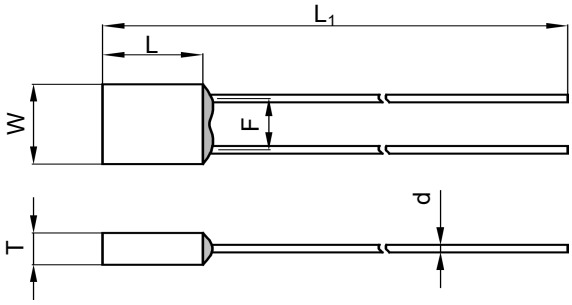

L	L_1	W	T	d	F
7.5 ± 0.5	35.0 ± 2.0	8.3 ± 0.5	3.4 ± 0.2	1.05 ± 0.05	5.2± 0.5

All Rights Reserved by Xiamen SET Electronics Co., Ltd. 2021-2023 V2.3

Specifications

Model	T_f	Fusing Temp.	T_h	T_m	I_r	U_r	I_n 8 / 20 μs (15 Times)	I_{max} 8 / 20 μs (1 Time)	UL	cUL	TUV	VDE	PSE	CCC	RoHS, REACH
	(°C)	(°C)	(°C)	(°C)	(A)	(V)	(kA)	(kA)							
T102	102	98 ± 2	72 61[a]	200	15 / 16	AC 250	6	12	●	●	○	●	●	●	●
						AC 125			●	●					●
						DC 100			●	●					●
T115	115	111 ± 2	85 73[a]	200	15 / 16	AC 250	6	12	●	●	○	●	●	●	●
						AC 125			●	●					●
						DC 100			●	●					●
T125	125	121 ± 2	95	200	15 / 16	AC 250	6	12	○	○	●	○	○	●	●
T136	136	131 ± 2	106 101[a]	200	15 / 16	AC 250	6	12	●	●	○	●	●	●	●
						AC 125			●	●					●
						DC 100			●	●					●
T150	150	145 ± 2	118	200	15 / 16	AC 250	6	12	●	●	●	○	○	○	●
						AC 125			●	●					●
						DC 100			●	●					●

a: VDE standard upgrade requirements, holding temperature (T_h) is defined as the inside environment temperature of test equipment cavity, the previous temperature measurement point is the product shell temperature.

Note:
"●"Means certificated.
"○"Means non-certificated.

All Rights Reserved by Xiamen SET Electronics Co., Ltd. 2021-2023 V2.3

Packaging Information

Bulk

Item	PE Bag	PE Bag	Carton
Dimensions (mm)	135 × 85	190 × 180	440 × 300 × 260
Quantity (PCS)	50	500	20000
Gross Weight (kg)			17.0 ± 10%

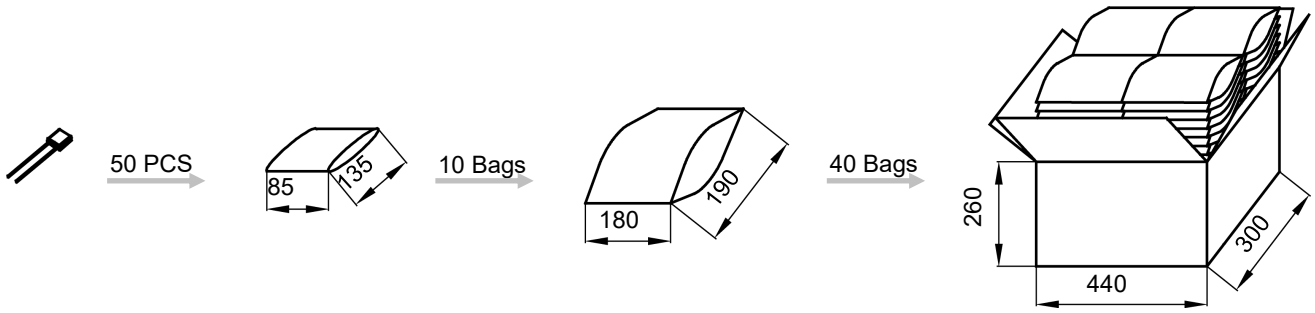

Taping

Item	Box	Carton
Dimensions (mm)	328 × 200 × 70	480 × 340 × 220
Quantity (PCS)	2000	12000
Gross Weight (kg)		12.0 ± 10%

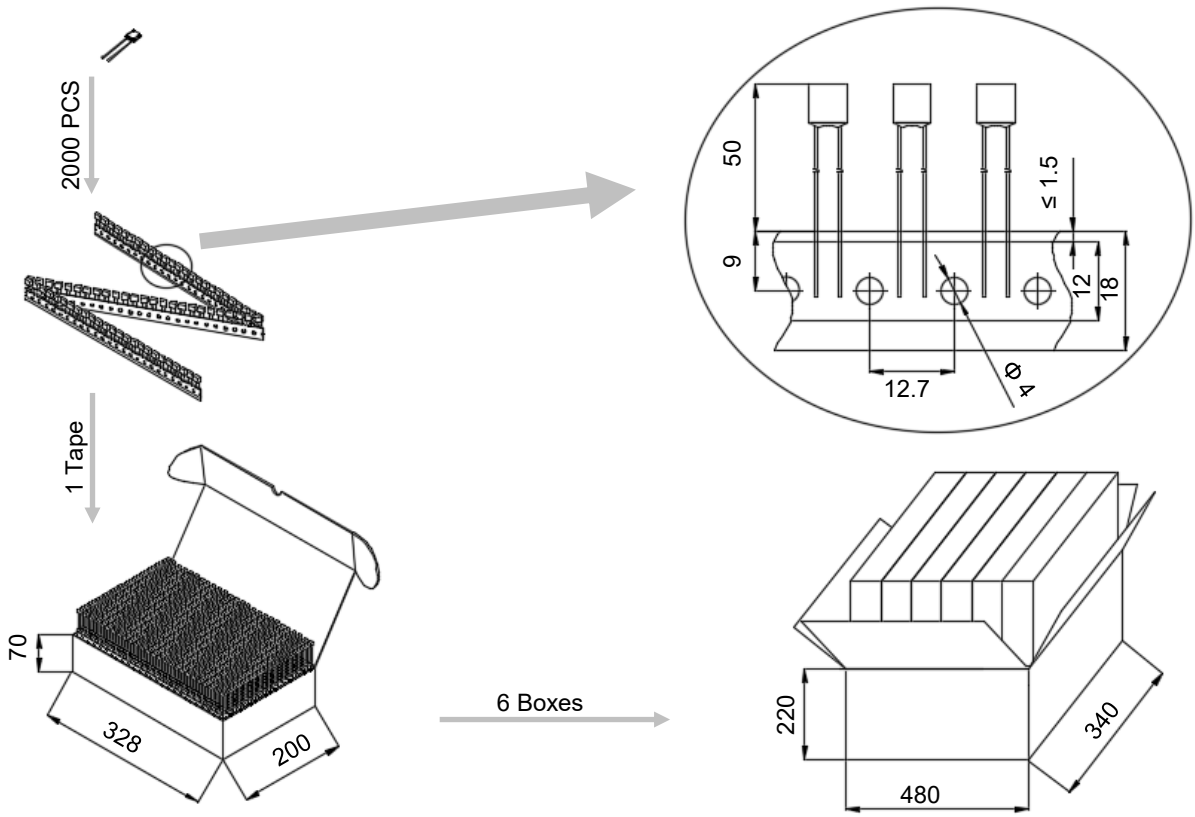

All Rights Reserved by Xiamen SET Electronics Co., Ltd. 2021-2023 V2.3

Product Temp.-Time Curve (For Reference Only)

The Temp.-Time Curve of Thermal-Link in different Temp. oil baths.

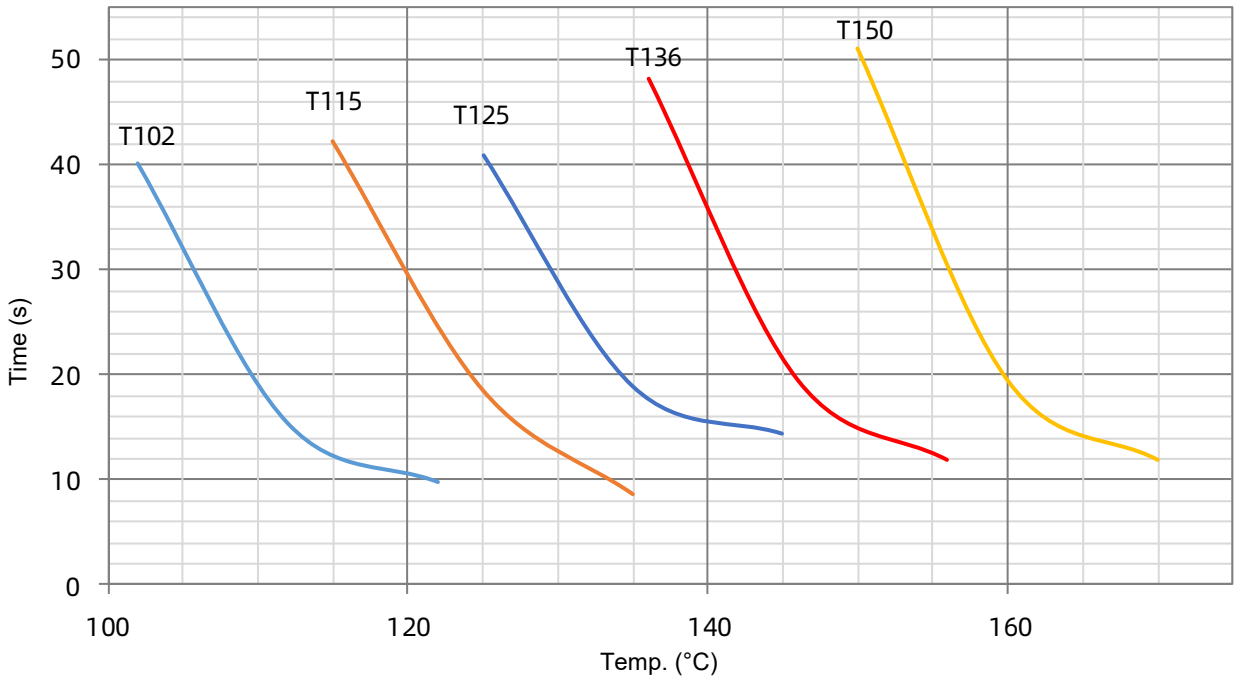

Product Current-Time Curve (For Reference Only)

The Current-Time Curve shows functioning time at multi-times rated current at room temperature 25 ± 2 °C.

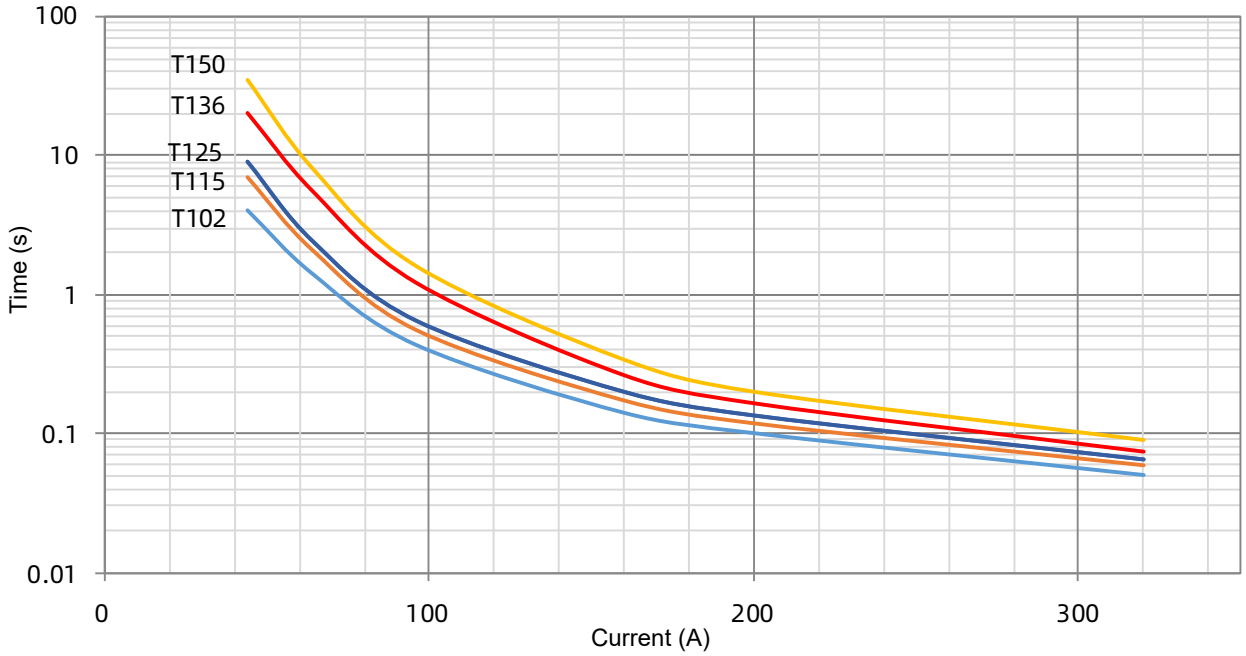

All Rights Reserved by Xiamen SET Electronics Co., Ltd. 2021-2023 V2.3

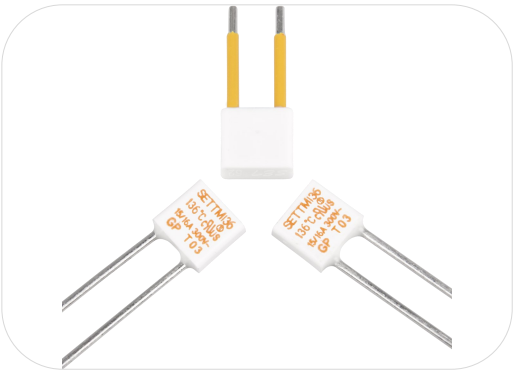

Applications

- Lamps
- Switched-Mode Power Supplies
- Home Electrical Appliances
- Power Strips
- Batteries
- Surge Protective Devices

Features

- High Accuracy of Functioning Temp.
- Non-Resettable
- High Surge Capacity
- RoHS & REACH Compliant

Customization

- Temp.
- The Length of Lead Wires
- Taping Packing Available
- Lead Wires can be Insulated

ATCO

Agency Approvals

Agency Mark	Standards	No.
	UL 60691	E214712
	CAN-CSA-E60691	E214712
	EN 60691	R50388886

Dimensions (mm)

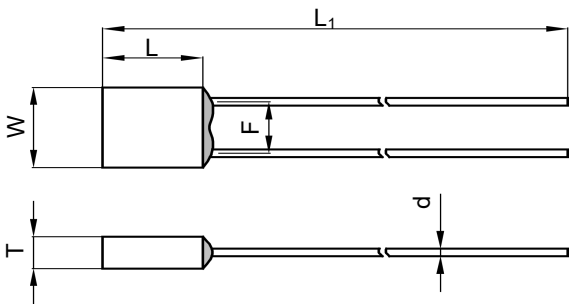

L	L_1	W	T	d	F
7.5 ± 0.5	35.0 ± 2.0	8.3 ± 0.5	3.4 ± 0.2	1.05 ± 0.05	5.2 ± 0.5

All Rights Reserved by Xiamen SET Electronics Co., Ltd. 2021-2023 V2.3

Specifications

Model	T_f	Fusing Temp.	T_h	T_m	I_r	U_r	I_n 8 / 20 μs (15 Times)	I_{max} 8 / 20 μs (1 Time)	UL	cUL	TUV	RoHS REACH
	(°C)	(°C)	(°C)	(°C)	(A)	(V)	(kA)	(kA)				
TM102	102	98 ± 2	72	200	15 / 16	AC 300	6	12	●	●	●	●
TM115	115	111 ± 2	85	200	15 / 16	AC 300	6	12	●	●	●	●
TM136	136	131 ± 2	106	200	15 / 16	AC 300	6	12	●	●	●	●
TM150	150	145 ± 2	118	200	15 / 16	AC 300	6	12	●	●	●	●

Note:
"● "Means certificated.
"○ "Means non-certificated.

ATCO

All Rights Reserved by Xiamen SET Electronics Co., Ltd. 2021-2023 V2.3

Packaging Information

Bulk

Item	PE Bag	PE Bag	Carton
Dimensions (mm)	135 × 85	190 × 180	440 × 300 × 260
Quantity (PCS)	50	500	20000
Gross Weight (kg)			17.0 ± 10%

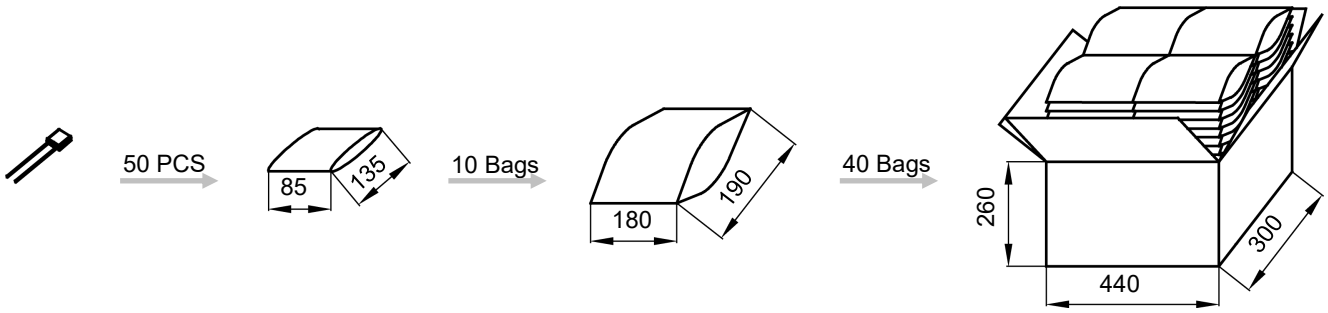

Taping

Item	Box	Carton
Dimensions (mm)	328 × 200 × 70	480 × 340 × 220
Quantity (PCS)	2000	12000
Gross Weight (kg)		12.0 ± 10%

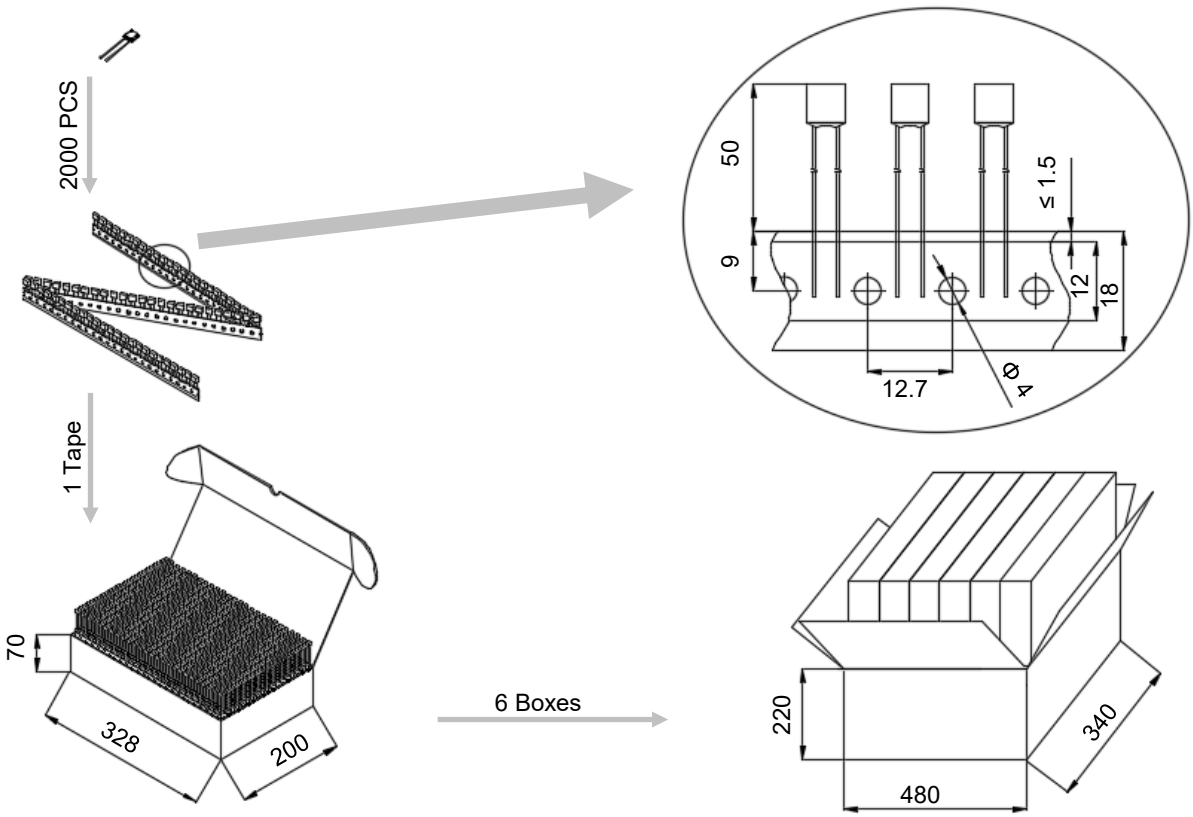

All Rights Reserved by Xiamen SET Electronics Co., Ltd. 2021-2023 V2.3

Product Temp.-Time Curve (For Reference Only)

The Temp.-Time Curve of Thermal-Link in different Temp. oil baths.

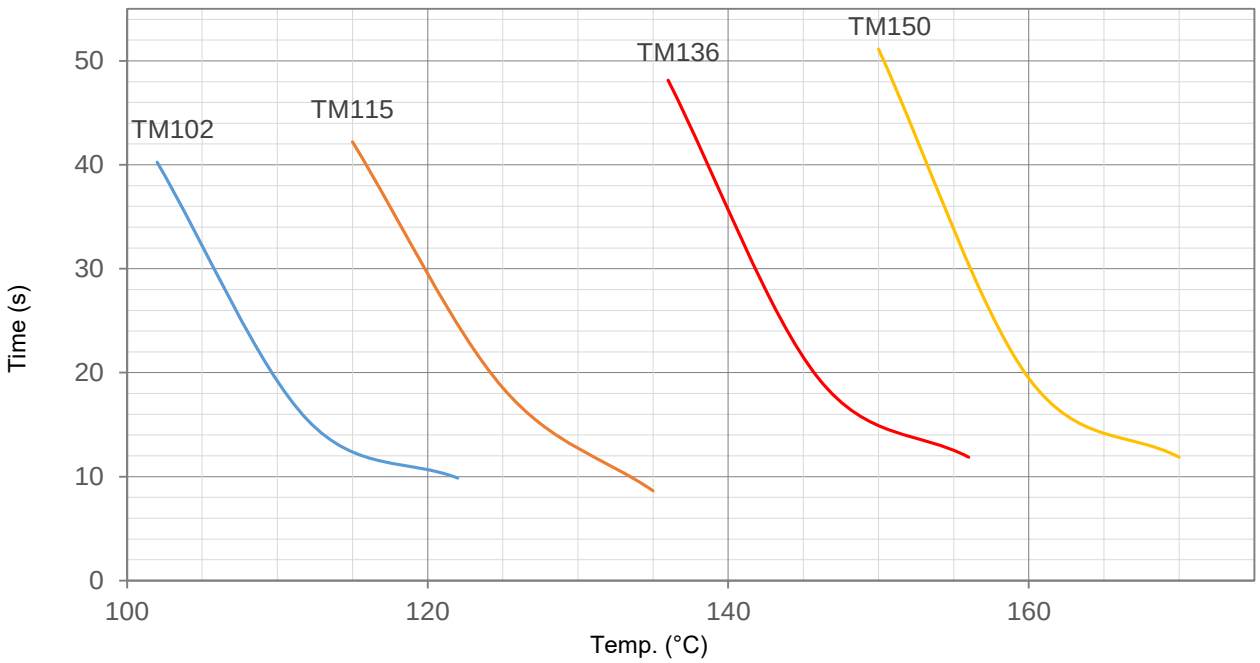

Product Current-Time Curve (For Reference Only)

The Current-Time Curve shows functioning time at multi-times rated current at room temperature 25 ± 2 °C.

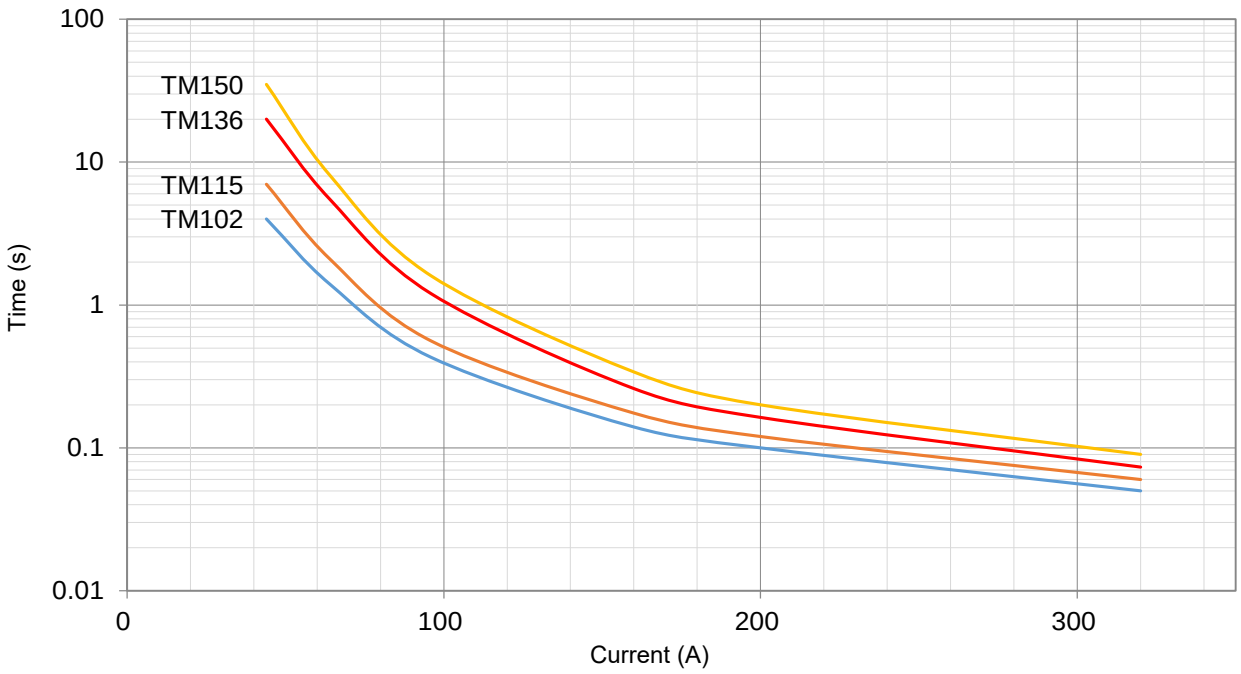

All Rights Reserved by Xiamen SET Electronics Co., Ltd. 2021-2023 V2.3

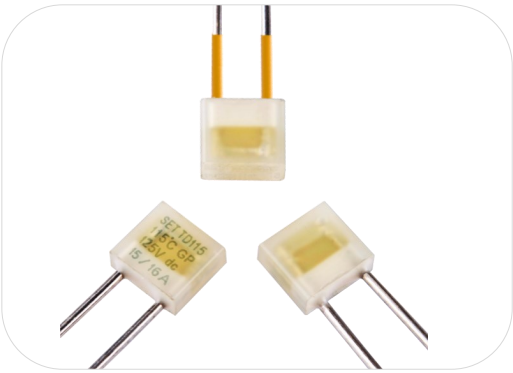

Applications

- Switched-Mode Power Supplies
- Batteries
- Surge Protective Devices

Features

- High Accuracy of Functioning Temp.
- Non-Resettable
- RoHS & REACH Compliant

Customization

- Temp.
- The Length of Lead Wires
- Taping Packing Available
- Lead Wires can be Insulated

Dimensions (mm)

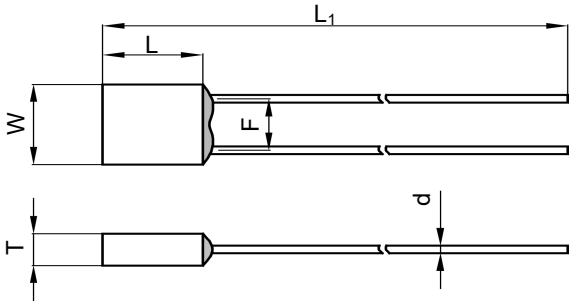

L	L_1	W	T	d	F
7.5 ± 0.5	50.0 ± 2.0	8.6 ± 0.5	3.6 ± 0.2	1.05 ± 0.05	5.2 ± 0.5

All Rights Reserved by Xiamen SET Electronics Co., Ltd. 2021-2023 V2.3

Specifications

Model	T_f	Fusing Temp.	T_h	T_m	I_r	U_r	RoHS REACH
	(°C)	(°C)	(°C)	(°C)	(A)	(V)	
TD102	102	98 ± 2	72	160	15 / 16	DC 125	●
TD115	115	111 ± 2	85	160	15 / 16	DC 125	●
TD125	125	121 ± 2	95	160	15 / 16	DC 125	●
TD130	130	125 ± 2	100	160	15 / 16	DC 125	●
TD136	136	131 ± 2	106	160	15 / 16	DC 125	●
TD150	150	145 ± 2	120	160	15 / 16	DC 125	●

Note:
"● "Means certificated.
"○ "Means non-certificated.

ATCO

All Rights Reserved by Xiamen SET Electronics Co., Ltd. 2021-2023 V2.3

Packaging Information

Bulk

Item	PE Bag	PE Bag	Carton
Dimensions (mm)	135 × 85	190 × 180	440 × 300 × 260
Quantity (PCS)	50	500	20000
Gross Weight (kg)			22.0 ± 10%

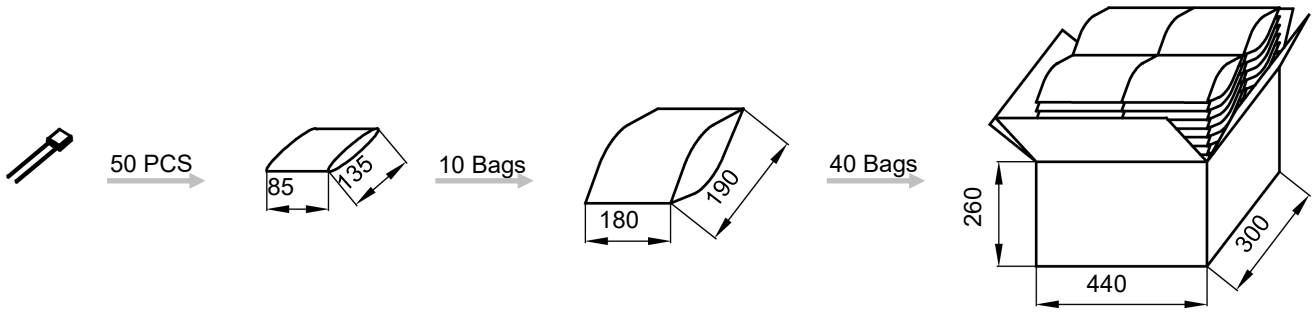

Taping

Item	Box	Carton
Dimensions (mm)	328 × 200 × 70	480 × 340 × 220
Quantity (PCS)	2000	12000
Gross Weight (kg)		14.0 ± 10%

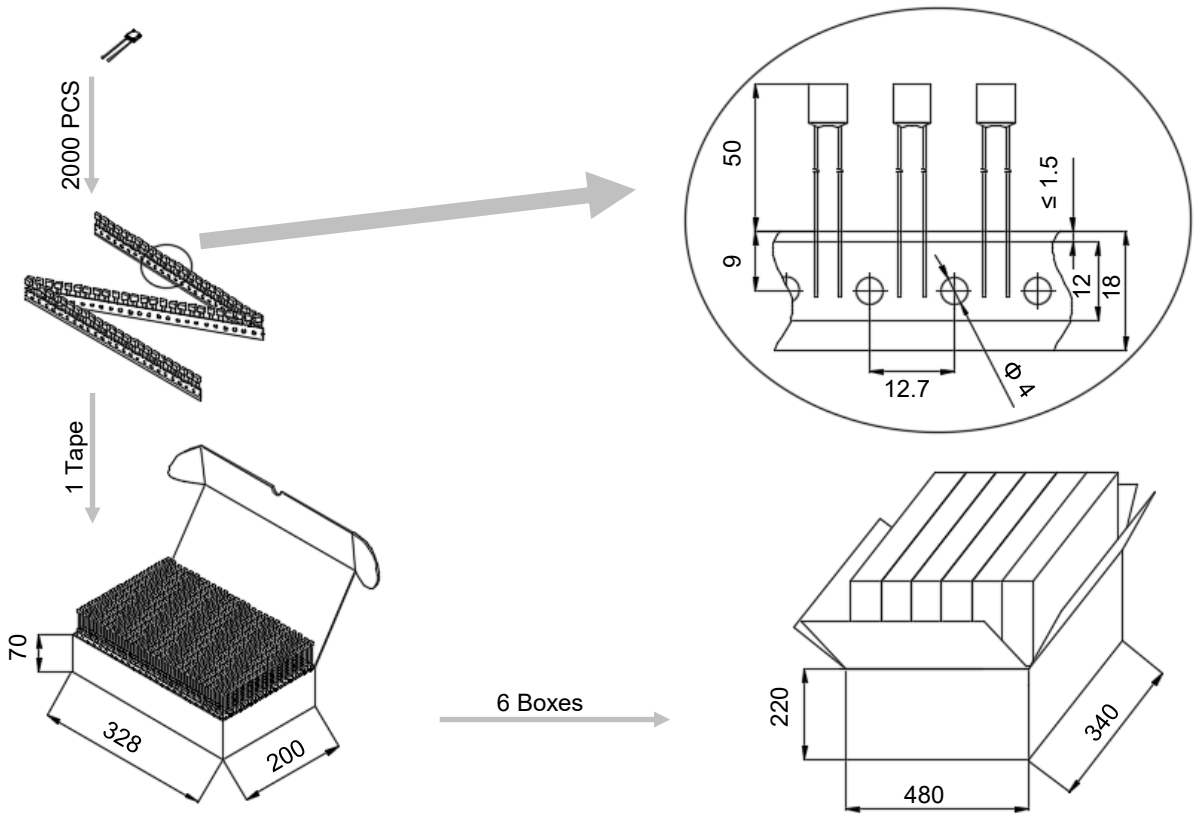

All Rights Reserved by Xiamen SET Electronics Co., Ltd. 2021-2023 V2.3

Product Temp.-Time Curve (For Reference Only)

The Temp.-Time Curve of Thermal-Link in different Temp. oil baths.

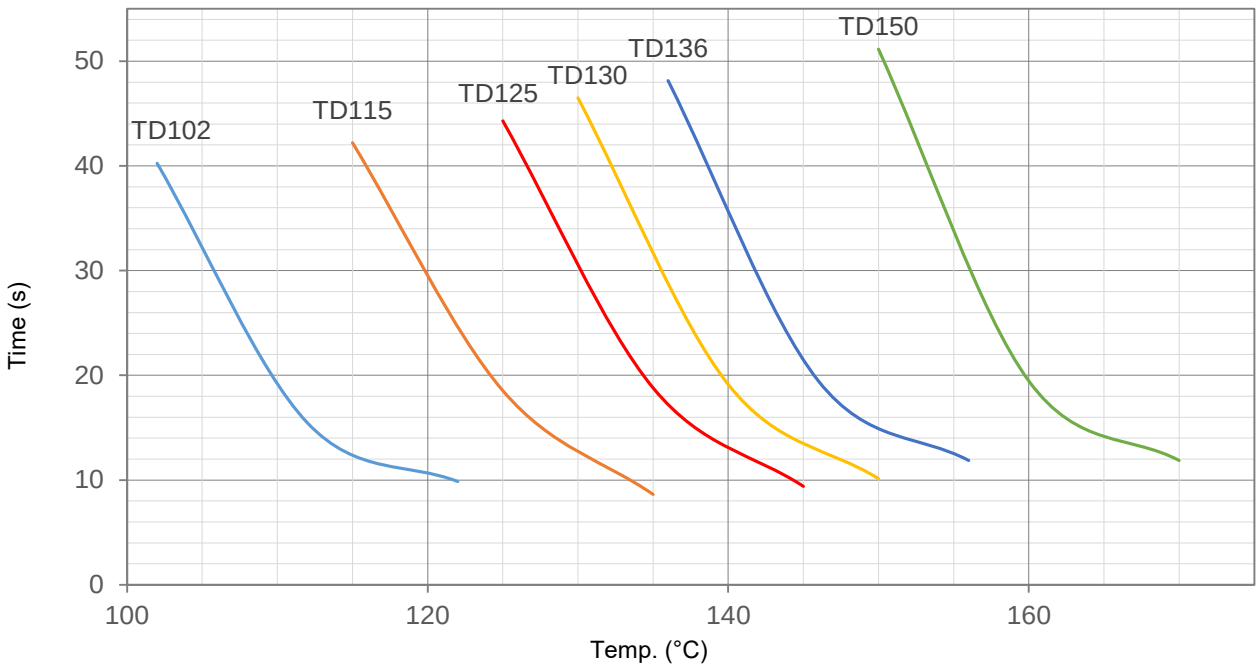

Product Current-Time Curve (For Reference Only)

The Current-Time Curve shows functioning time at multi-times rated current at room temperature 25 ± 2 °C.

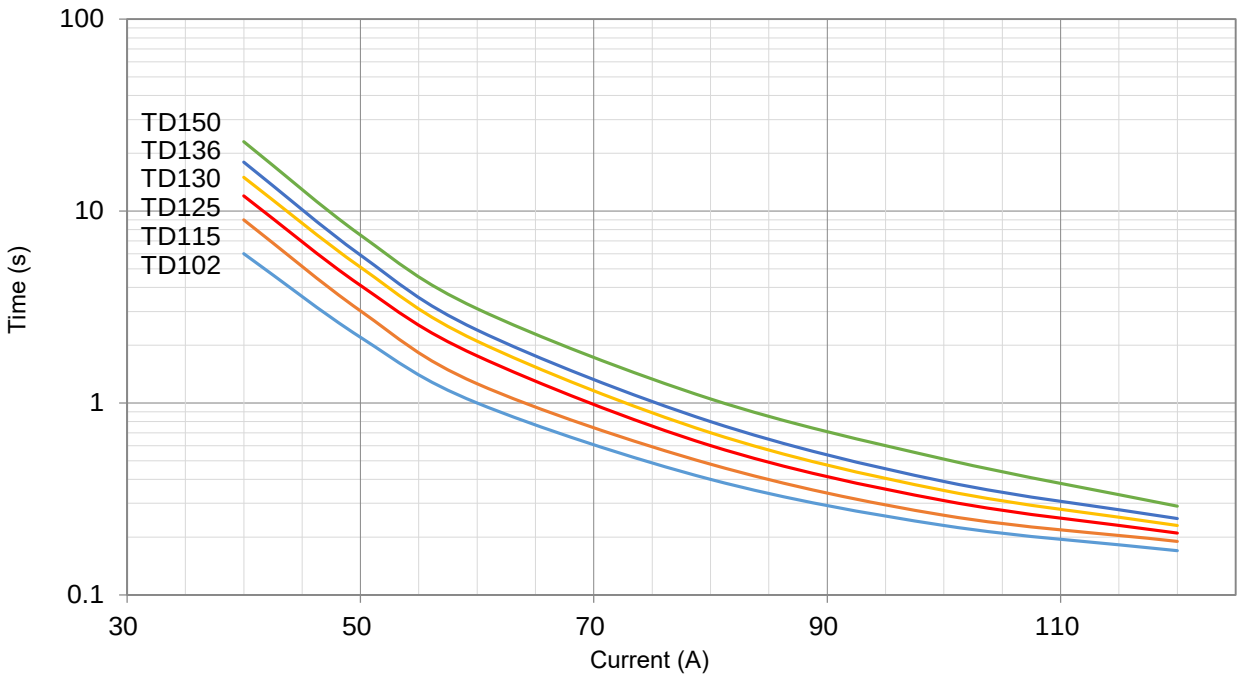

All Rights Reserved by Xiamen SET Electronics Co., Ltd. 2021-2023 V2.3

Applications

- Lamps
- Switched-Mode Power Supplies
- Home Electrical Appliances
- Power Strips
- Batteries
- Surge Protective Devices

Features

- High Accuracy of Functioning Temp.
- Non-Resettable
- High Surge Capacity
- RoHS & REACH Compliant

Customization

- Temp.
- The Length of Lead Wires

Dimensions (mm)

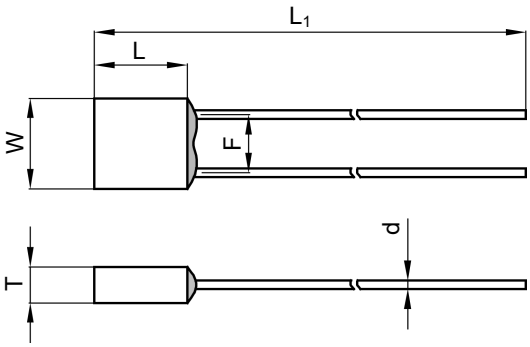

L	L_1	W	T	d	F
13.0 ± 1.0	50.0 ± 2.0	11.5 ± 1.0	4.9 ± 0.8	2.00 ± 0.05	7.2 ± 0.8

All Rights Reserved by Xiamen SET Electronics Co., Ltd. 2021-2023 V2.3

Specifications

Model	T_f	Fusing Temp.	T_h	T_m	I_r	U_r	I_n 8 / 20 μs (15 Times)	I_{max} 8 / 20 μs (1 Time)	RoHS REACH
	(°C)	(°C)	(°C)	(°C)	(A)	(V)	(kA)	(kA)	
N102	102	99 ± 2	65	160	30	AC 250	15	30	●
N115	115	112 ± 2	78	160	30	AC 250	20	40	●
N125	125	122 ± 2	90	160	30	AC 250	20	40	●
N130	130	126 ± 2	96	160	30	AC 250	20	40	●
N136	136	132 ± 2	102	160	30	AC 250	20	40	●
N150	150	146 ± 2	116	160	30	AC 250	20	40	●

Note:
"● "Means certificated.
"○ "Means non-certificated.

Packaging Information

Bulk

Item	PE Bag	Box	Carton
Dimensions (mm)	135 × 85	255 × 88 × 98	440 × 300 × 260
Quantity (PCS)	30	300	3000
Gross Weight (kg)			12.5 ± 10%

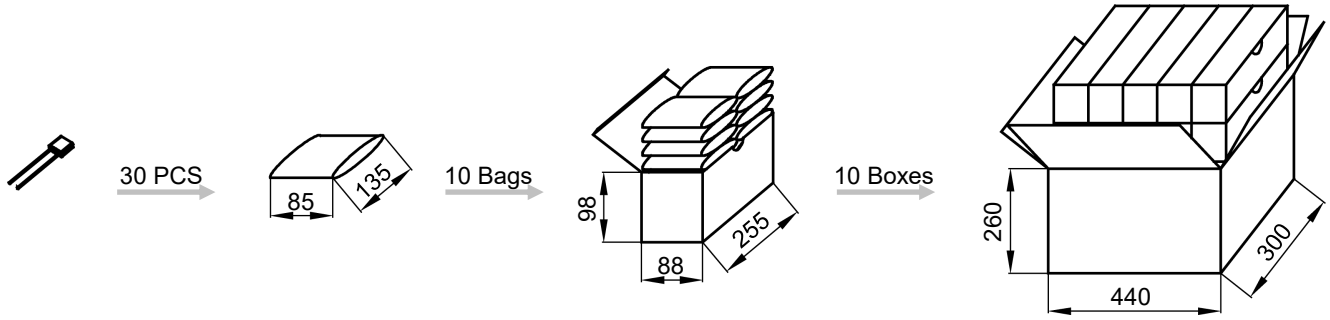

All Rights Reserved by Xiamen SET Electronics Co., Ltd. 2021-2023 V2.3

Product Temp.-Time Curve (For Reference Only)

The Temp.-Time Curve of Thermal-Link in different Temp. oil baths.

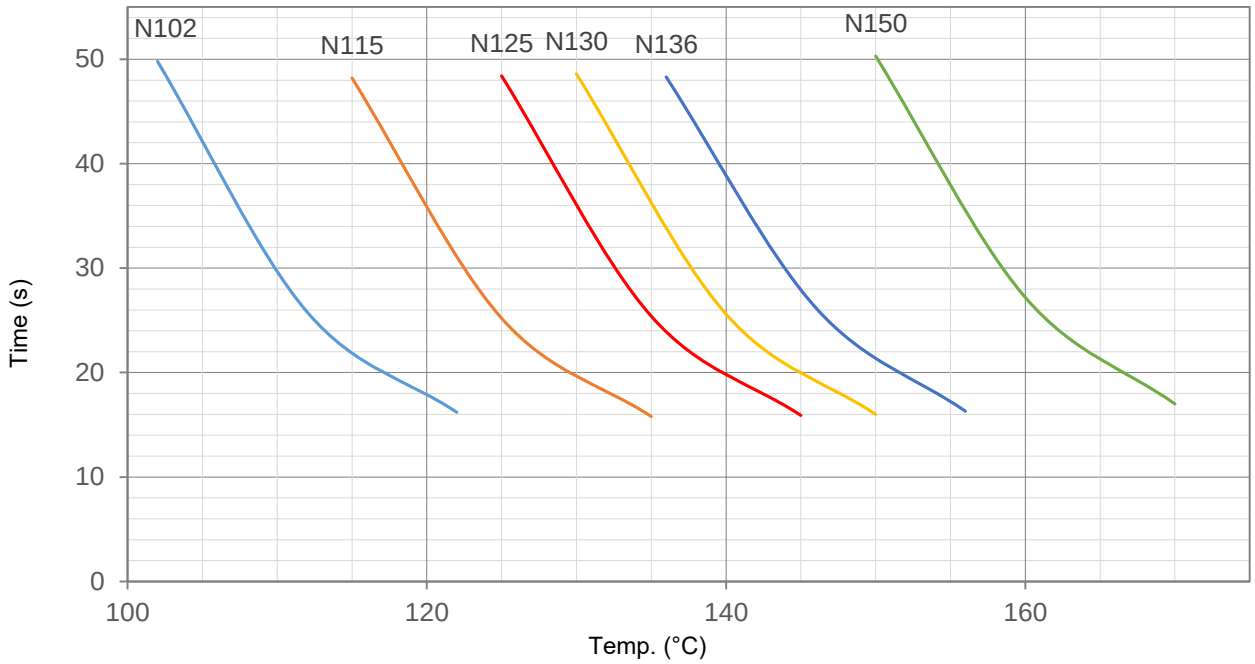

Product Current-Time Curve (For Reference Only)

The Current-Time Curve shows functioning time at multi-times rated current at room temperature 25 ± 2 °C.

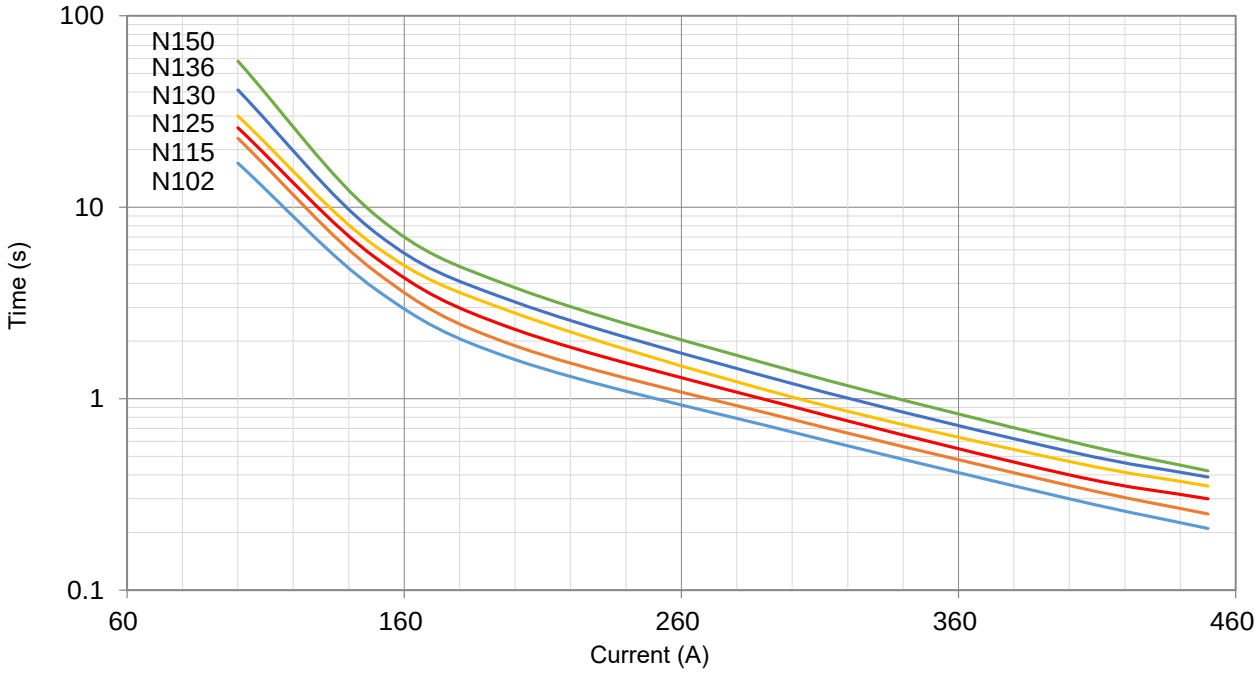

All Rights Reserved by Xiamen SET Electronics Co., Ltd. 2021-2023 V2.3

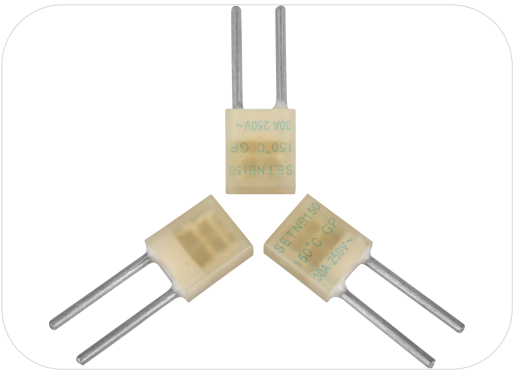

Applications

- Lamps
- Switched-Mode Power Supplies
- Home Electrical Appliances
- Power Strips
- Batteries
- Surge Protective Devices

Features

- High Accuracy of Functioning Temp.
- Non-Resettable
- High Surge Capacity
- RoHS & REACH Compliant

Customization

- Temp.
- The Length of Lead Wires

ATCO

Agency Approvals

Agency Mark	Standards	File No.
TÜVRheinland	EN60691	R50447212
CCC	GB/T 9816	2020980205000175

Dimensions (mm)

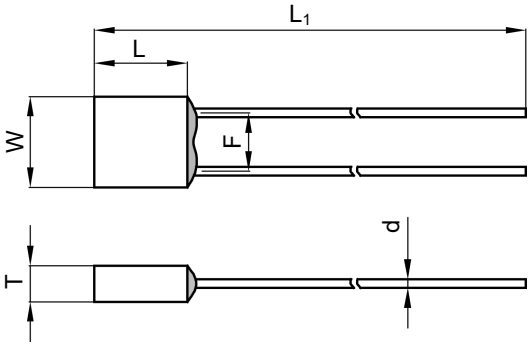

L	L_1	W	T	d	F
13.0 ± 1.0	50.0 ± 2.0	11.5 ± 1.0	4.9 ± 0.8	1.70 ± 0.05	7.4 ± 0.8

All Rights Reserved by Xiamen SET Electronics Co., Ltd. 2021-2023 V2.3

Specifications

Model	T_f	Fusing Temp.	T_h	T_m	I_r	U_r	I_n 8 / 20 μs (15 Times)	I_{max} 8 / 20 μs (1 Time)	TUV	CCC	RoHS REACH
	(°C)	(°C)	(°C)	(°C)	(A)	(V)	(kA)	(kA)			
NB115	115	112 ± 2	78	160	30	AC 250	20	40	●	●	●
NB136	136	132 ± 2	102	160	30	AC 250	20	40	●	●	●
NB150	150	146 ± 2	116	160	30	AC 250	20	40	●	●	●

Note:
"● "Means certificated.
"○ "Means non-certificated.

Packaging Information

Bulk

Item	PE Bag	Box	Carton
Dimensions (mm)	135 × 85	255 × 88 × 98	440 × 300 × 260
Quantity (PCS)	30	300	3000
Gross Weight (kg)			12.5 ± 10%

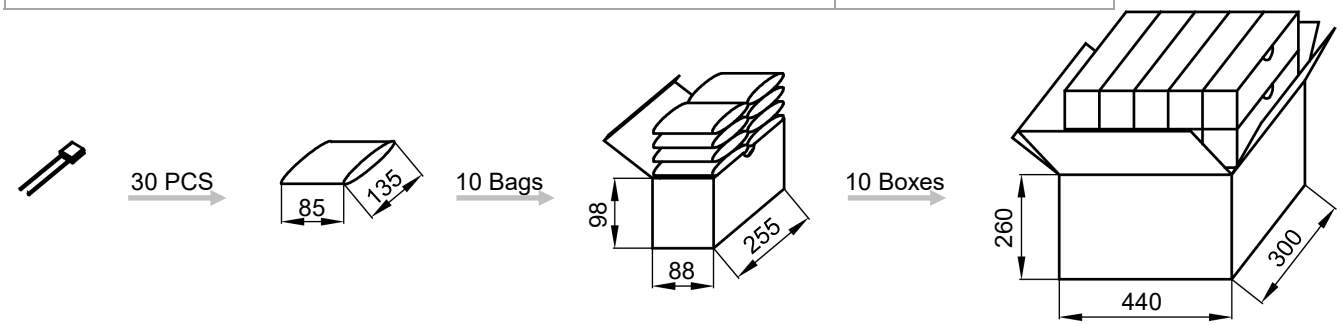

All Rights Reserved by Xiamen SET Electronics Co., Ltd. 2021-2023 V2.3

Product Temp.-Time Curve (For Reference Only)

The Temp.-Time Curve of Thermal-Link in different Temp. oil baths.

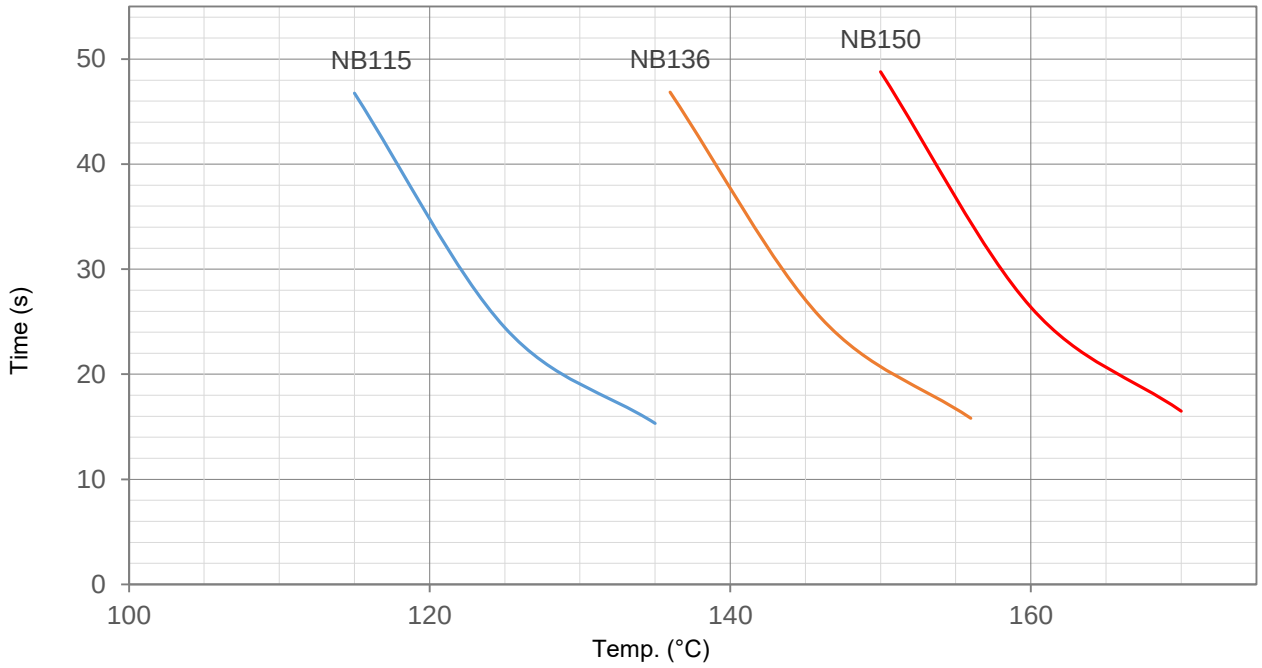

Product Current-Time Curve (For Reference Only)

The Current-Time Curve shows functioning time at multi-times rated current at room temperature 25 ± 2 °C.

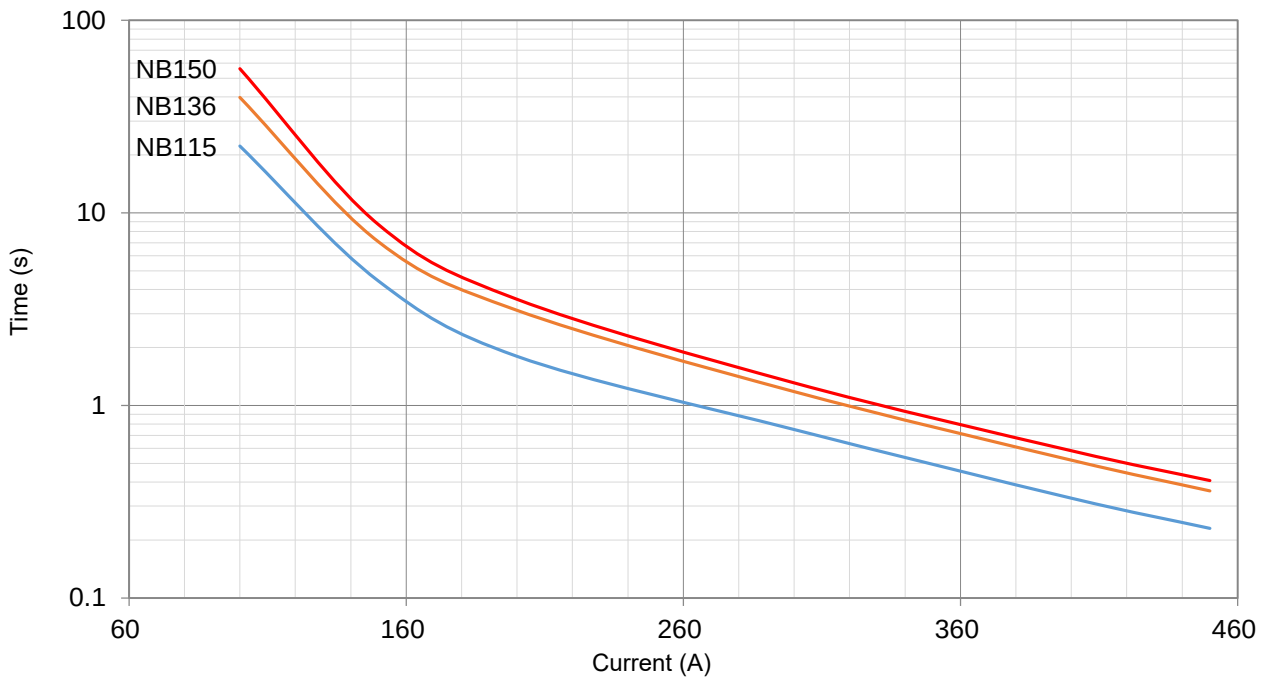

All Rights Reserved by Xiamen SET Electronics Co., Ltd. 2021-2023 V2.3

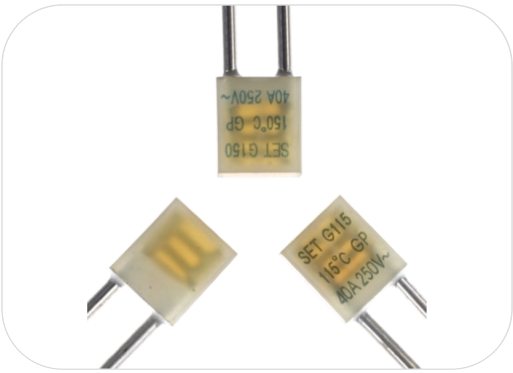

Applications

- Lamps
- Switched-Mode Power Supplies
- Home Electrical Appliances
- Power Strips
- Batteries
- Surge Protective Devices

Features

- High Accuracy of Functioning Temp.
- Non-Resettable
- High Surge Capacity
- RoHS & REACH Compliant

Customization

- Temp.
- The Length of Lead Wires

Agency Approvals

Agency Mark	Standards	No.
®	UL 60691	E214712
c ®	CAN-CSA-E60691	E214712

Dimensions (mm)

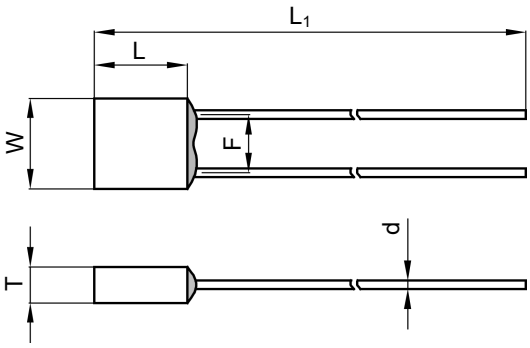

L	L_1	W	T	d	F
15.5 ± 1.0	50.0 ± 2.0	13.8 ± 1.0	5.7 ± 0.8	2.20 ± 0.05	9.0 ± 0.8

All Rights Reserved by Xiamen SET Electronics Co., Ltd. 2021-2023 V2.3

Specifications

Model	T_f	Fusing Temp.	T_h	T_m	I_r	U_r	I_n 8 / 20 μs (15 Times)	I_{max} 8 / 20 μs (1 Time)	UL	cUL	RoHS REACH
	(°C)	(°C)	(°C)	(°C)	(A)	(V)	(kA)	(kA)	UL	cUL	
G102	102	99 ± 2	61	160	40	AC 250	20	40	○	○	●
G115	115	112 ± 2	74	160	40	AC 250	30	60	○	○	●
G125	125	122 ± 2	84	160	40	AC 250	30	60	○	○	●
G130	130	126 ± 2	88	160	40	AC 250	30	60	○	○	●
G136	136	132 ± 2	94	160	40	AC 250	30	60	○	○	●
G150	150	146 ± 2	108	160	40	AC 250	30	60	●	●	●

Note:
"● "Means certificated.
"○ "Means non-certificated.

Packaging Information

Bulk

Item	PE Bag	Box	Carton
Dimensions (mm)	135 × 85	255 × 88 × 98	440 × 300 × 260
Quantity (PCS)	30	300	3000
Gross Weight (kg)			15.0 ± 10%

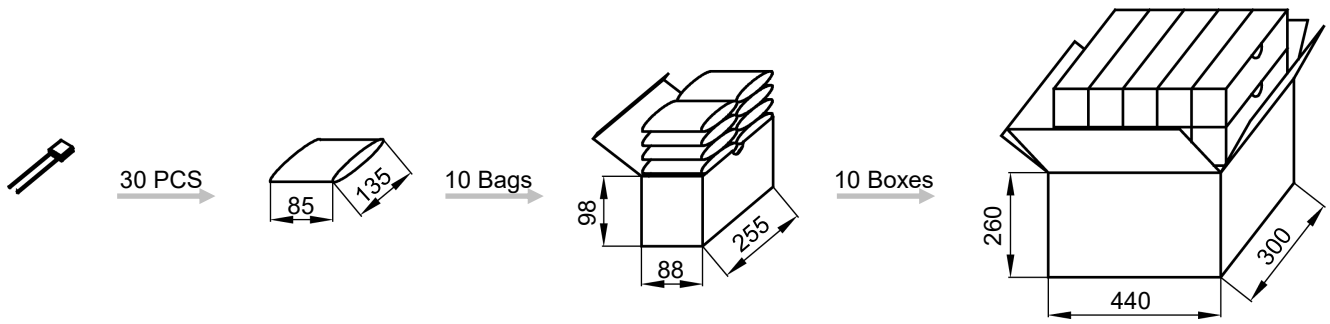

All Rights Reserved by Xiamen SET Electronics Co., Ltd. 2021-2023 V2.3

Product Temp.-Time Curve (For Reference Only)

The Temp.-Time Curve of Thermal-Link in different Temp. oil baths.

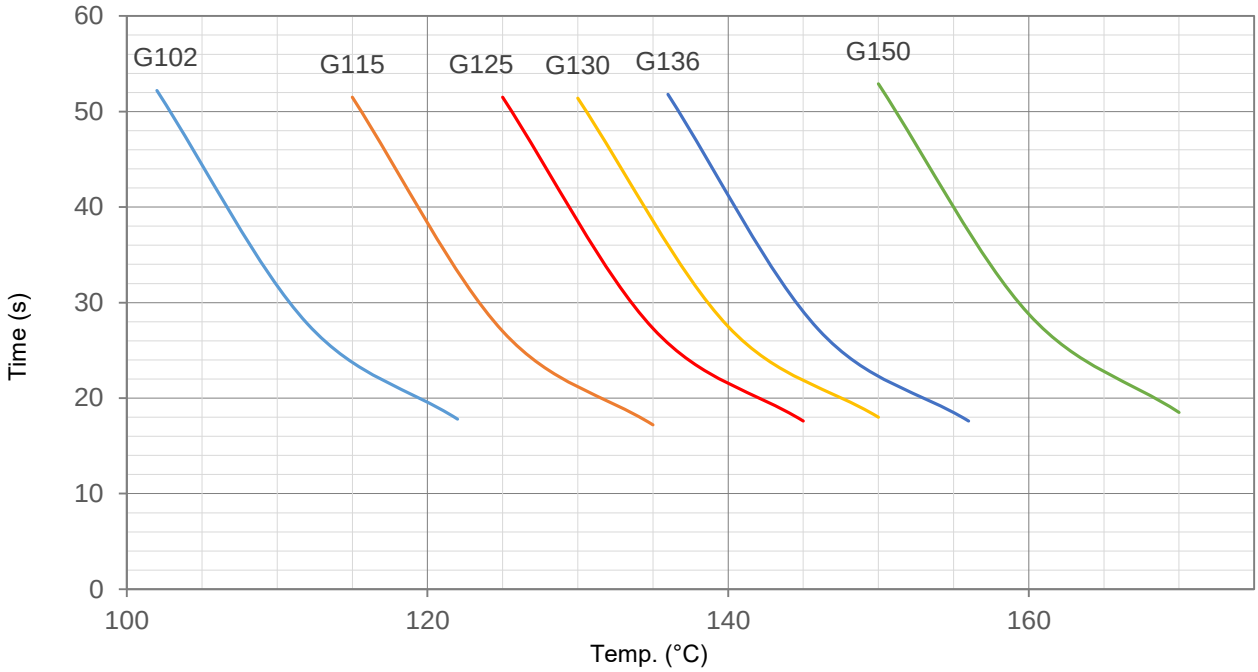

Product Current-Time Curve (For Reference Only)

The Current-Time Curve shows functioning time at multi-times rated current at room temperature 25 ± 2 °C.

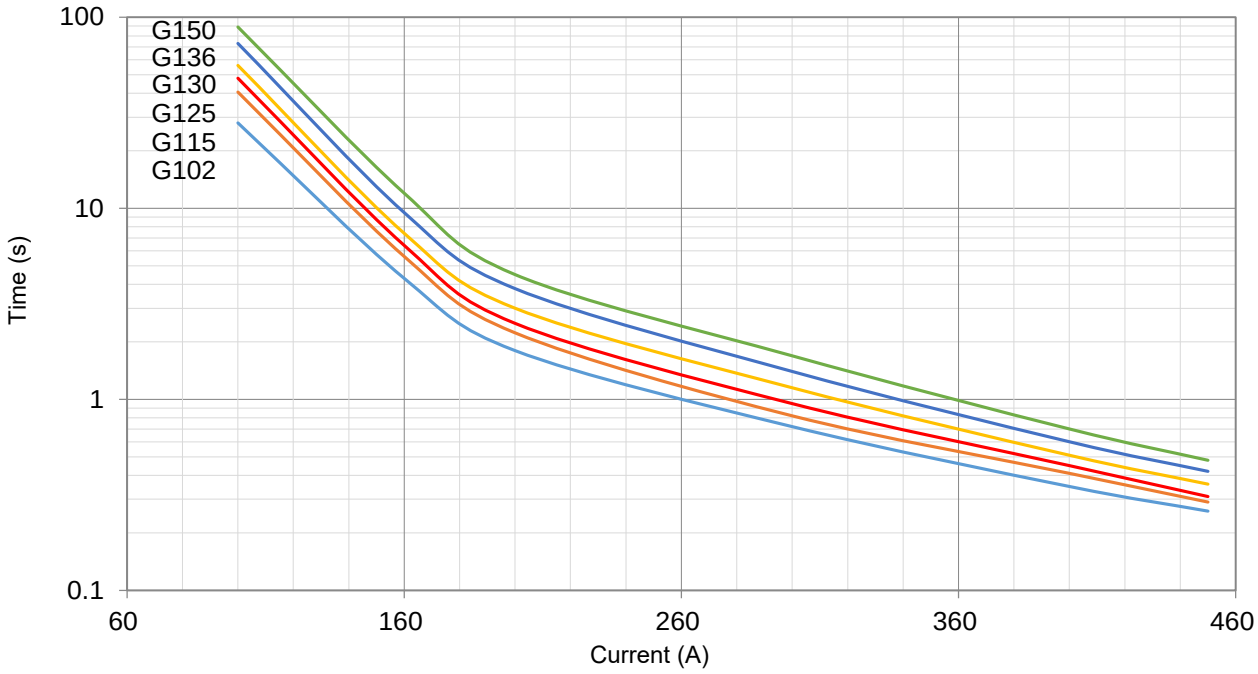

All Rights Reserved by Xiamen SET Electronics Co., Ltd. 2021-2023 V2.3

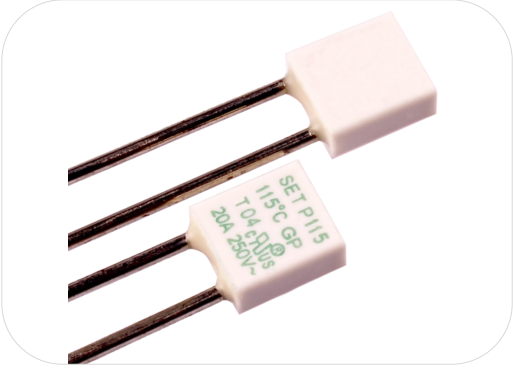

Applications

- Lamps
- Switched-Mode Power Supplies
- Home Electrical Appliances
- Power Strips
- Batteries
- Surge Protective Devices

Features

- High Accuracy of Functioning Temp.
- Non-Resettable
- High Surge Capacity
- RoHS & REACH Compliant

Customization

- Temp.
- The Length of Lead Wires

Agency Approvals

Agency Mark	Standards	No.
	UL 60691	E214712
	CAN-CSA-E60691	E214712
	EN 60691	R50259029
	GB 9816.1	2020980205000180

Dimensions (mm)

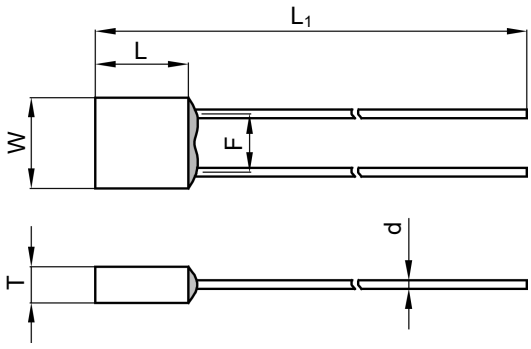

L	L_1	W	T	d	F
11.5 ± 0.5	50.0 ± 2.0	10.8 ± 0.5	4.8 ± 0.2	1.60 ± 0.05	6.6 ± 0.8

All Rights Reserved by Xiamen SET Electronics Co., Ltd. 2021-2023 V2.3

Specifications

Model	T_f	Fusing Temp.	T_h	T_m	I_r	U_r	I_n 8 / 20 μs (15 Times)	I_{max} 8 / 20 μs (1 Time)	UL	cUL	TUV	CCC	RoHS REACH
	(°C)	(°C)	(°C)	(°C)	(A)	(V)	(kA)	(kA)					
P102	102	98 ± 2	66	200	20	AC 250	10	20	○	○	○	○	●
						AC 400			○	○	●	●	●
						DC 120			○	○	●	●	●
P115	115	111 ± 2	82	200	20	AC 250	12	25	●	●	○	○	●
						AC 300			●	●	○	○	●
						AC 400			○	○	●	●	●
						DC 120			○	○	●	●	●
P125	125	121 ± 2	90	200	20	AC 250	12	25	○	○	○	○	●
						AC 400			○	○	●	●	●
						DC 120			○	○	●	●	●
P136	136	131 ± 2	102	200	20	AC 250	12	25	●	●	○	○	●
						AC 300			●	●	○	○	●
						AC 400			○	○	●	●	●
						DC 120			○	○	●	●	●

Note:
"● "Means certificated.
"○ "Means non-certificated.

Packaging Information

Bulk

Item	PE Bag	PE Bag	Carton
Dimensions (mm)	135 × 85	190 × 180	440 × 300 × 260
Quantity (PCS)	30	180	9000
Gross Weight (kg)			24.0± 10%

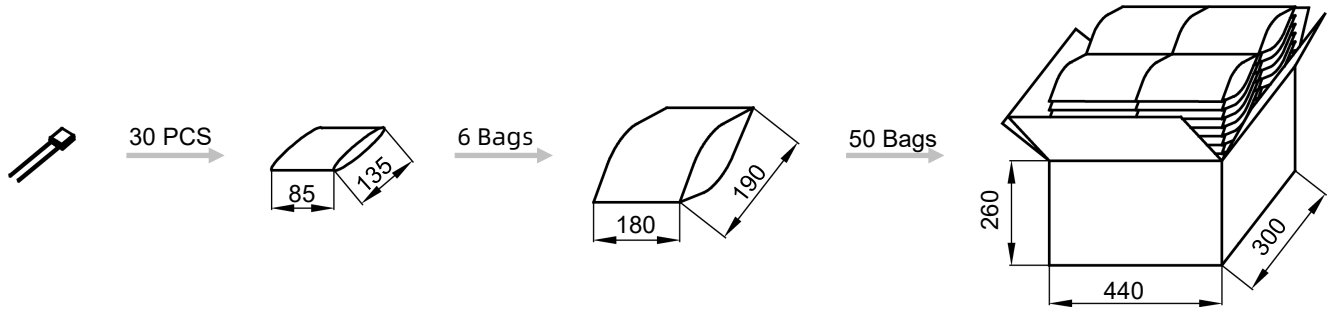

All Rights Reserved by Xiamen SET Electronics Co., Ltd. 2021-2023 V2.3

Product Temp.-Time Curve (For Reference Only)

The Temp.-Time Curve of Thermal-Link in different Temp. oil baths.

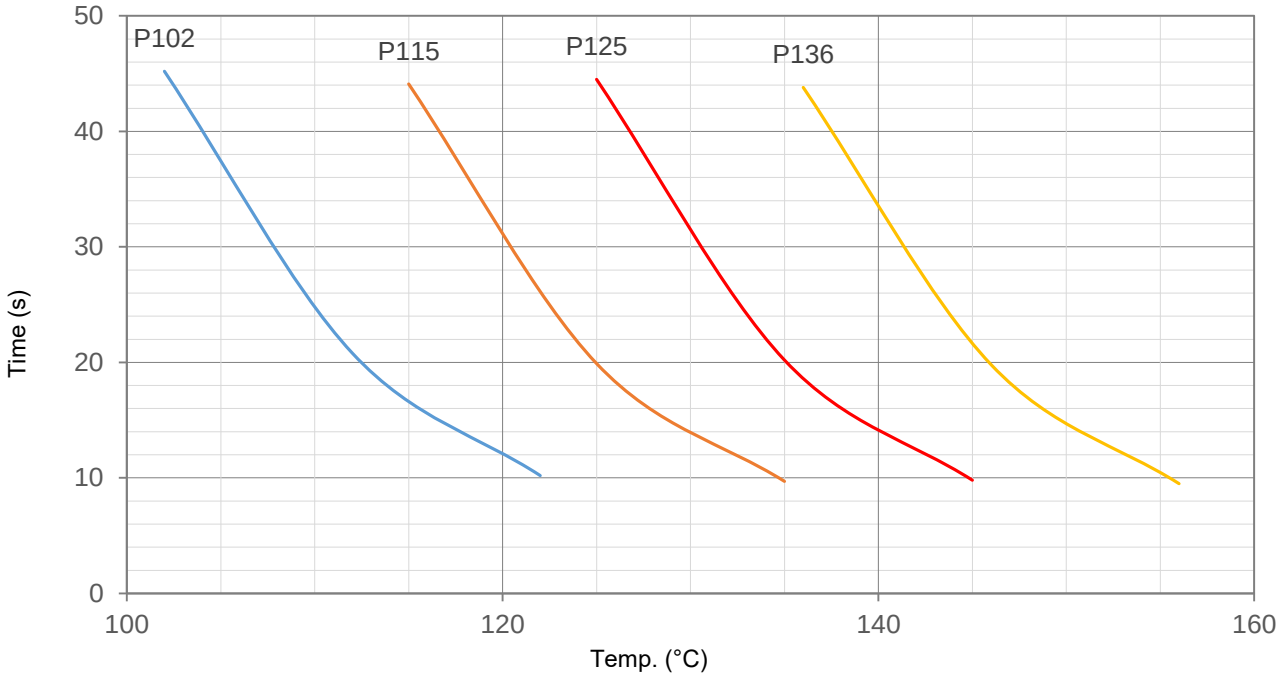

Product Current-Time Curve (For Reference Only)

The Current-Time Curve shows functioning time at multi-times rated current at room temperature 25 ± 2 °C.

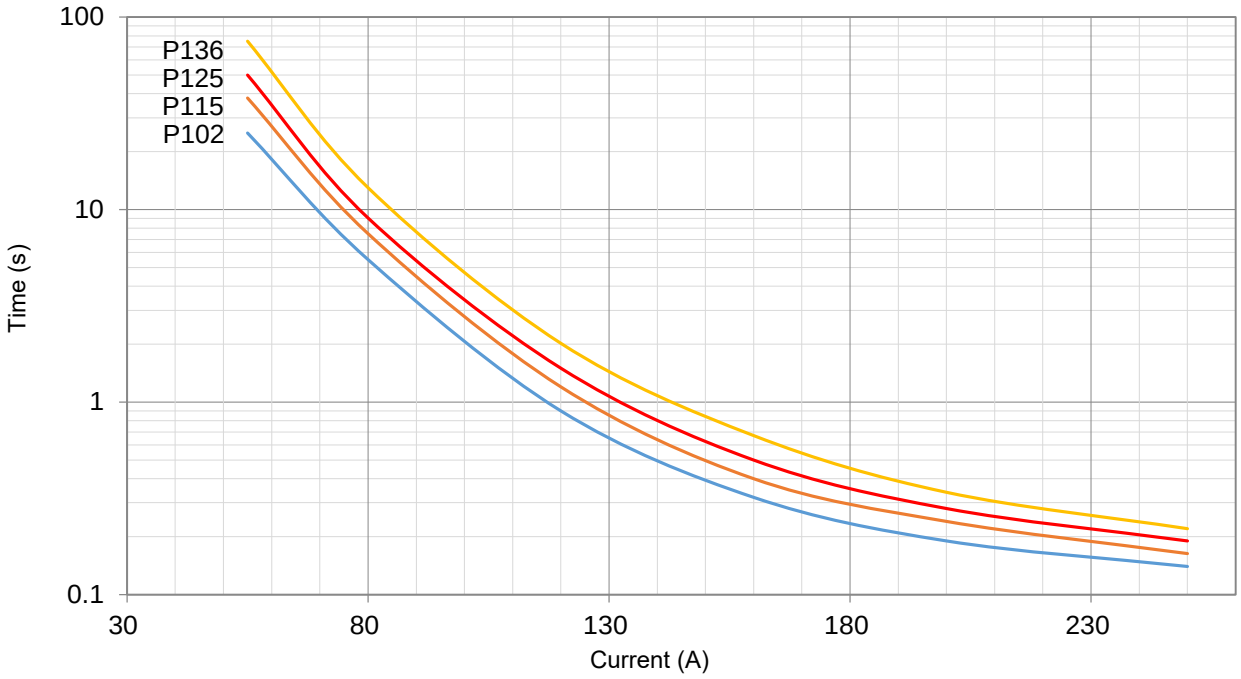

All Rights Reserved by Xiamen SET Electronics Co., Ltd. 2021-2023 V2.3

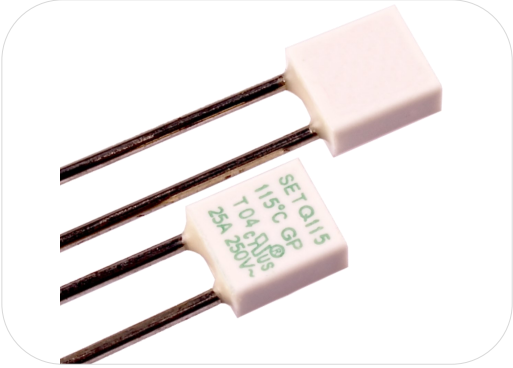

Applications

- Lamps
- Switched-Mode Power Supplies
- Home Electrical Appliances
- Power Strips
- Batteries
- Surge Protective Devices

Features

- High Accuracy of Functioning Temp.
- Non-Resettable
- High Surge Capacity
- RoHS & REACH Compliant

Customization

- Temp.
- The Length of Lead Wires

Agency Approvals

Agency Mark	Standards	No.
	UL 60691	E214712
	CAN-CSA-E60691	E214712
	EN 60691	R50259029
	GB 9816.1	2020980205000180

Dimensions (mm)

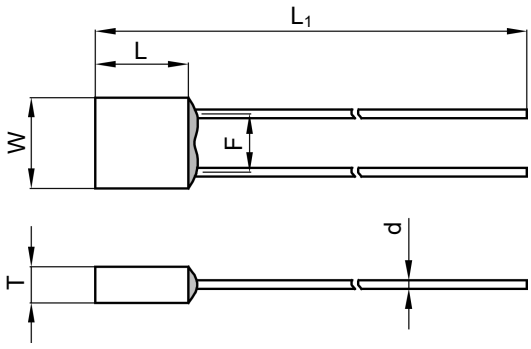

L	L_1	W	T	d	F
11.5 ± 0.5	50.0 ± 2.0	10.8 ± 0.5	4.8 ± 0.2	1.60 ± 0.05	6.6 ± 0.8

All Rights Reserved by Xiamen SET Electronics Co., Ltd. 2021-2023 V2.3

Specifications

Model	T_f	Fusing Temp.	T_h	T_m	I_r	U_r	I_n 8 / 20 μs (15 Times)	I_{max} 8 / 20 μs (1 Time)	UL	cUL	TUV	CCC	RoHS REACH
	(°C)	(°C)	(°C)	(°C)	(A)	(V)	(kA)	(kA)	UL	cUL	TUV	CCC	
Q102	102	98 ± 2	66	200	25	AC 250	12	25	○	○	○	○	●
						AC 400			○	○	●	●	●
						DC 120			○	○	●	●	●
Q115	115	111 ± 2	82	200	25	AC 250	15	30	●	●	○	○	●
						AC 300			●	●	○	○	●
						AC 400			○	○	●	●	●
						DC 120			○	○	●	●	●
Q125	125	121 ± 2	90	200	25	AC 250	15	30	○	○	○	○	●
						AC 400			○	○	●	●	●
						DC 120			○	○	●	●	●
Q136	136	131 ± 2	102	200	25	AC 250	15	30	●	●	○	○	●
						AC 300			●	●	○	○	●
						AC 400			○	○	●	●	●
						DC 120			○	○	●	●	●

Note:
"● "Means certificated.
"○ "Means non-certificated.

Packaging Information

Bulk

Item	PE Bag	PE Bag	Carton
Dimensions (mm)	135 × 85	190 × 180	440 × 300 × 260
Quantity (PCS)	30	180	9000
Gross Weight (kg)			24.0± 10%

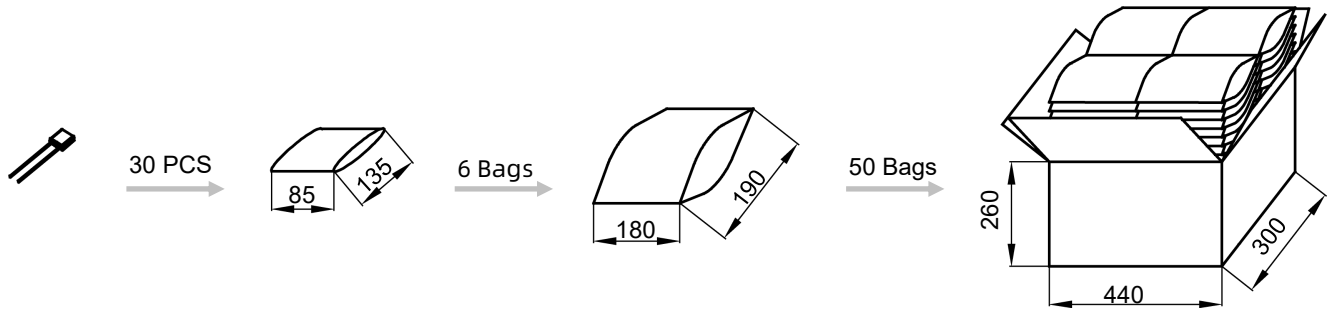

All Rights Reserved by Xiamen SET Electronics Co., Ltd. 2021-2023 V2.3

Product Temp.-Time Curve (For Reference Only)

The Temp.-Time Curve of Thermal-Link in different Temp. oil baths.

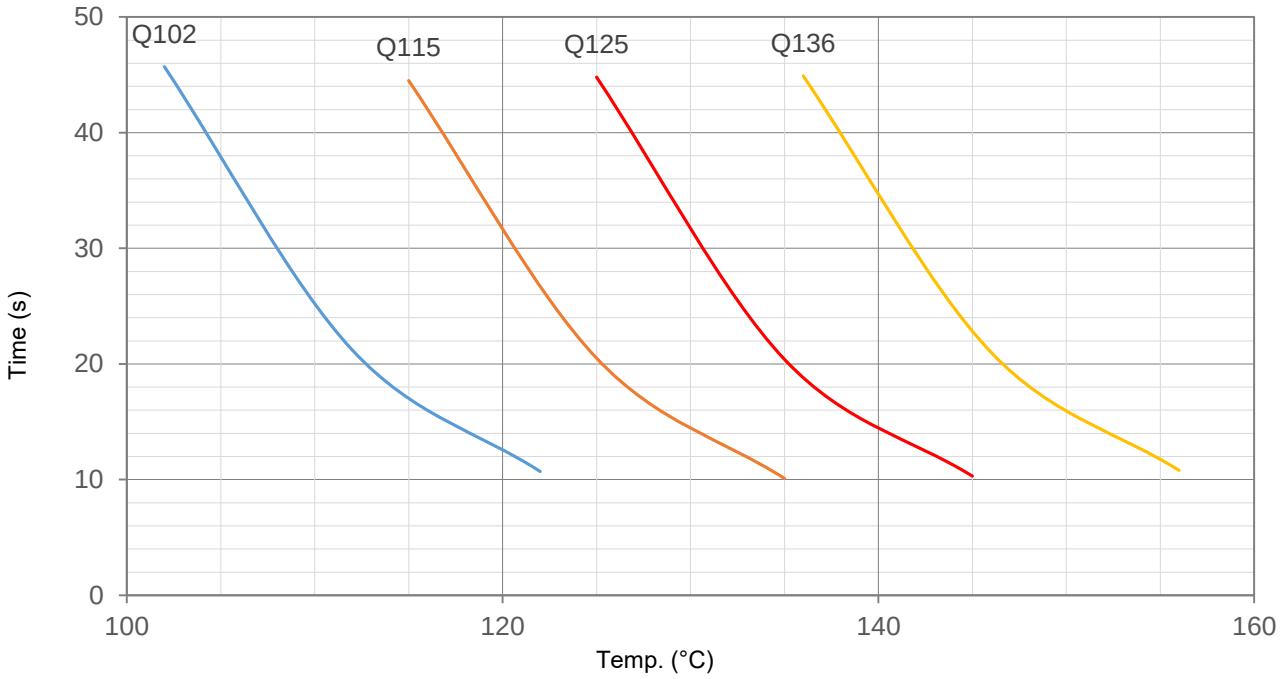

Product Current-Time Curve (For Reference Only)

The Current-Time Curve shows functioning time at multi-times rated current at room temperature 25 ± 2 °C.

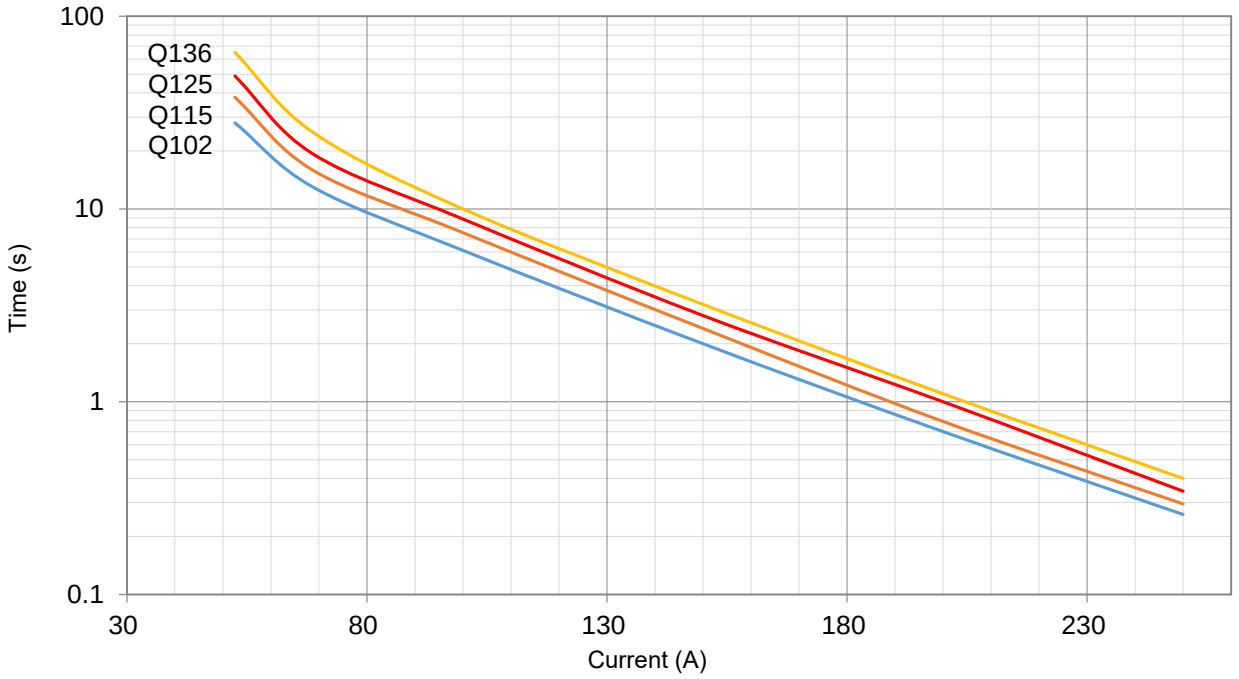

All Rights Reserved by Xiamen SET Electronics Co., Ltd. 2021-2023 V2.3

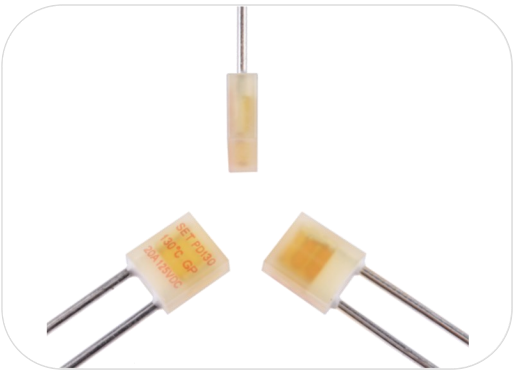

Applications

- Switched-Mode Power Supplies
- Batteries
- Surge Protective Devices

Features

- High Accuracy of Functioning Temp.
- Non-Resettable
- High Surge Capacity
- RoHS & REACH Compliant

Customization

- Temp.
- The Length of Lead Wires

Dimensions (mm)

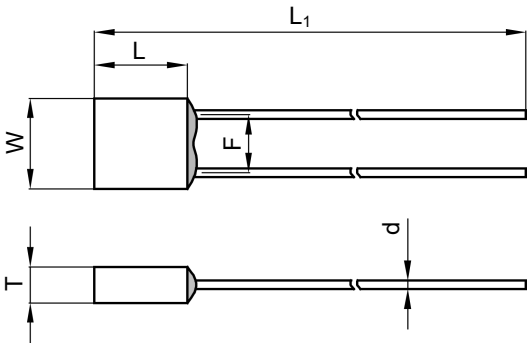

L	L_1	W	T	d	F
11.8 ± 0.5	50.0 ± 2.0	10.7 ± 0.5	4.8 ± 0.2	1.60 ± 0.05	6.6 ± 0.8

All Rights Reserved by Xiamen SET Electronics Co., Ltd. 2021-2023 V2.3

Specifications

Model	T_f	Fusing Temp.	T_h	T_m	I_r	U_r	RoHS REACH
	(°C)	(°C)	(°C)	(°C)	(A)	(V)	
PD102	102	98 ± 2	66	160	20	DC 125	●
PD115	115	111 ± 2	82	160	20	DC 125	●
PD125	125	121 ± 2	90	160	20	DC 125	●
PD130	130	125 ± 2	97	160	20	DC 125	●
PD136	136	131 ± 2	102	160	20	DC 125	●
PD150	150	145 ± 2	117	160	20	DC 125	●

Note:
"● "Means certificated.
"○ "Means non-certificated.

Packaging Information

Bulk

Item	PE Bag	PE Bag	Carton
Dimensions (mm)	135 × 85	190 × 180	440 × 300 × 260
Quantity (PCS)	30	180	9000
Gross Weight (kg)			23.0± 10%

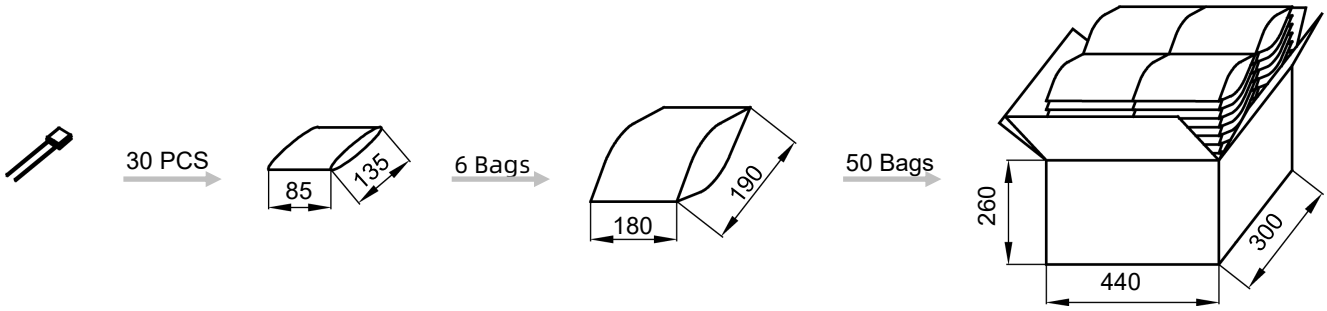

All Rights Reserved by Xiamen SET Electronics Co., Ltd. 2021-2023 V2.3

Product Temp.-Time Curve (For Reference Only)

The Temp.-Time Curve of Thermal-Link in different Temp. oil baths.

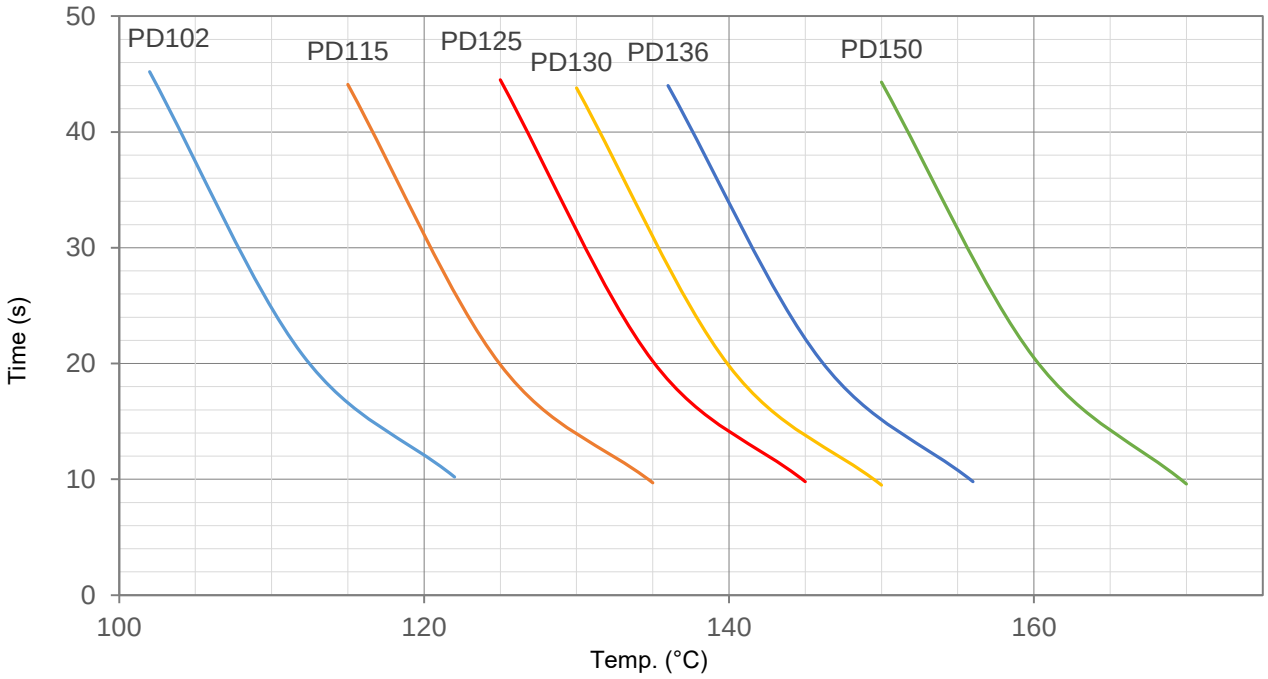

Product Current-Time Curve (For Reference Only)

The Current-Time Curve shows functioning time at multi-times rated current at room temperature 25 ± 2 °C.

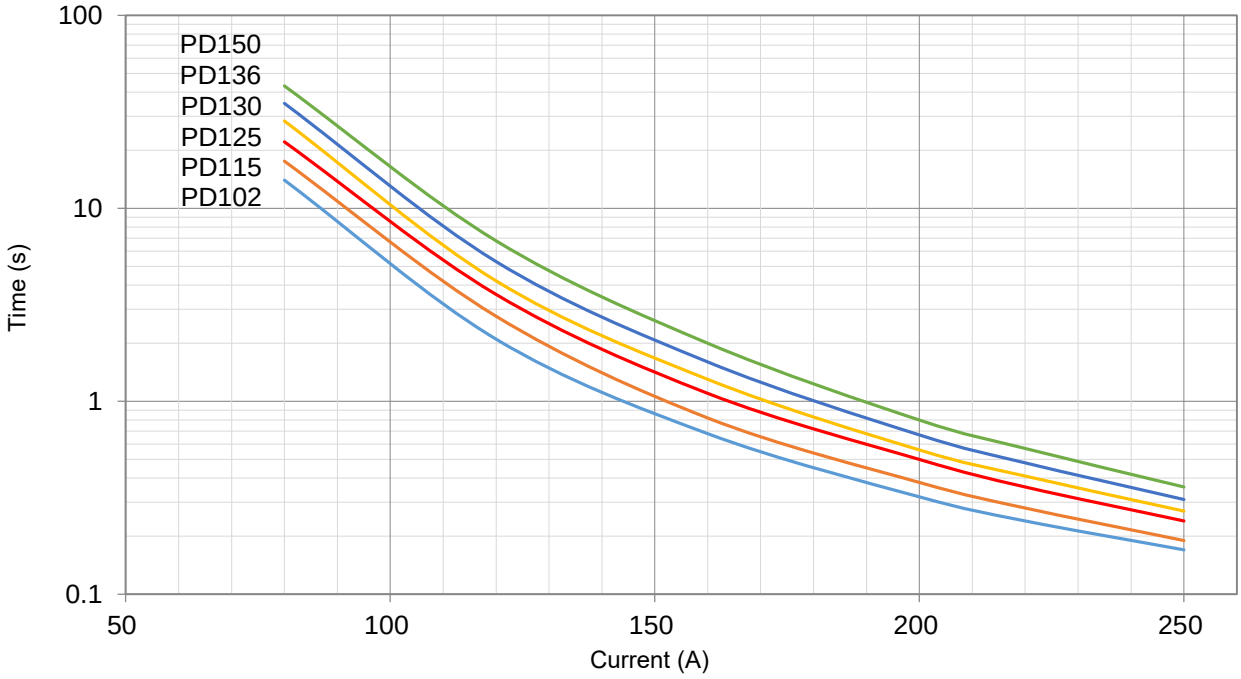

All Rights Reserved by Xiamen SET Electronics Co., Ltd. 2021-2023 V2.3

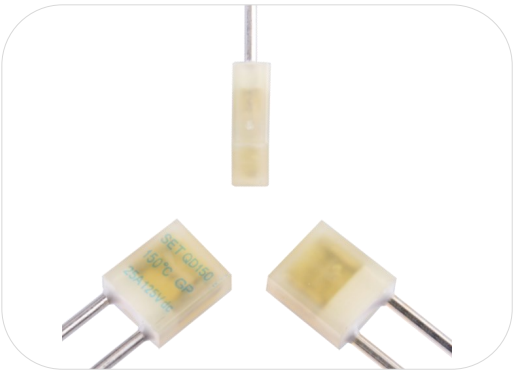

Applications

- Switched-Mode Power Supplies
- Batteries
- Surge Protective Devices

Features

- High Accuracy of Functioning Temp.
- Non-Resettable
- High Surge Capacity
- RoHS & REACH Compliant

Customization

- Temp.
- The Length of Lead Wires

Dimensions (mm)

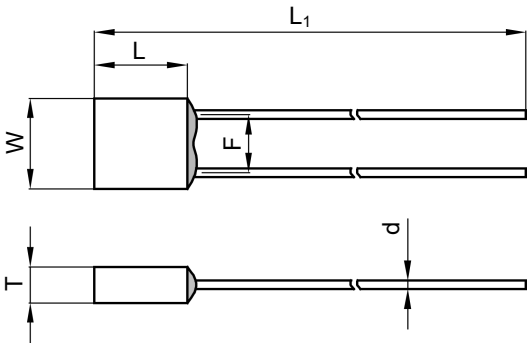

L	L_1	W	T	d	F
11.8 ± 0.5	50.0 ± 2.0	10.7 ± 0.5	4.8 ± 0.2	1.60 ± 0.05	6.6 ± 0.8

All Rights Reserved by Xiamen SET Electronics Co., Ltd. 2021-2023 V2.3

Specifications

Model	T_f	Fusing Temp.	T_h	T_m	I_r	U_r	RoHS REACH
	(°C)	(°C)	(°C)	(°C)	(A)	(V)	
QD102	102	98 ± 2	66	160	25	DC 125	●
QD115	115	111 ± 2	82	160	25	DC 125	●
QD125	125	121 ± 2	90	160	25	DC 125	●
QD130	130	125 ± 2	97	160	25	DC 125	●
QD136	136	131 ± 2	102	160	25	DC 125	●
QD150	150	145 ± 2	117	160	25	DC 125	●

Note:
"● "Means certificated.
"○ "Means non-certificated.

Packaging Information

Bulk

Item	PE Bag	PE Bag	Carton
Dimensions (mm)	135 × 85	190 × 180	440 × 300 × 260
Quantity (PCS)	30	180	9000
Gross Weight (kg)			23.0± 10%

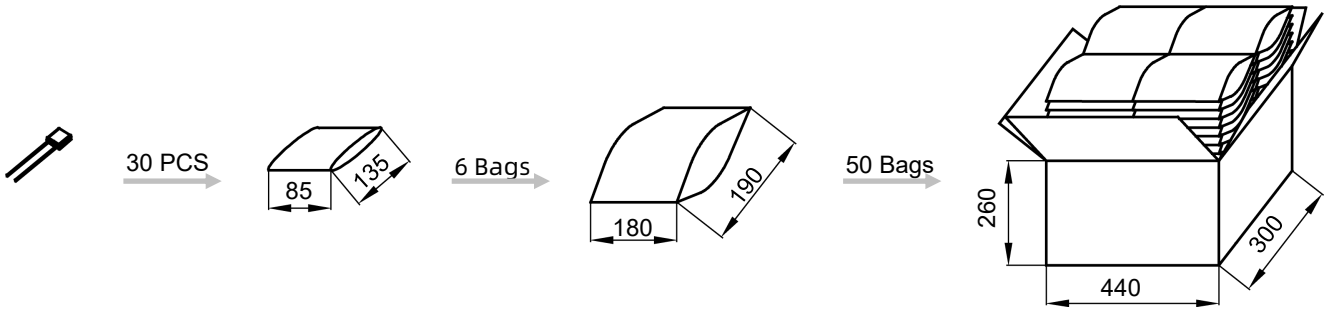

All Rights Reserved by Xiamen SET Electronics Co., Ltd. 2021-2023 V2.3

Product Temp.-Time Curve (For Reference Only)

The Temp.-Time Curve of Thermal-Link in different Temp. oil baths.

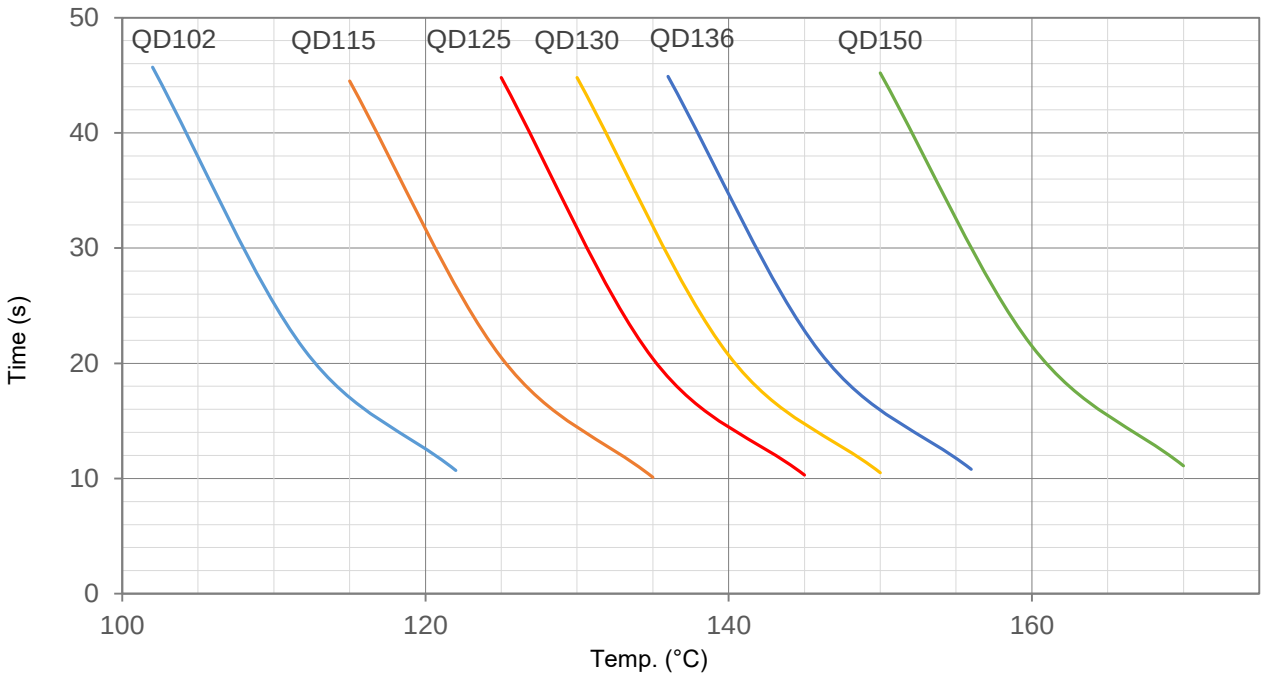

Product Current-Time Curve (For Reference Only)

The Current-Time Curve shows functioning time at multi-times rated current at room temperature 25 ± 2 °C.

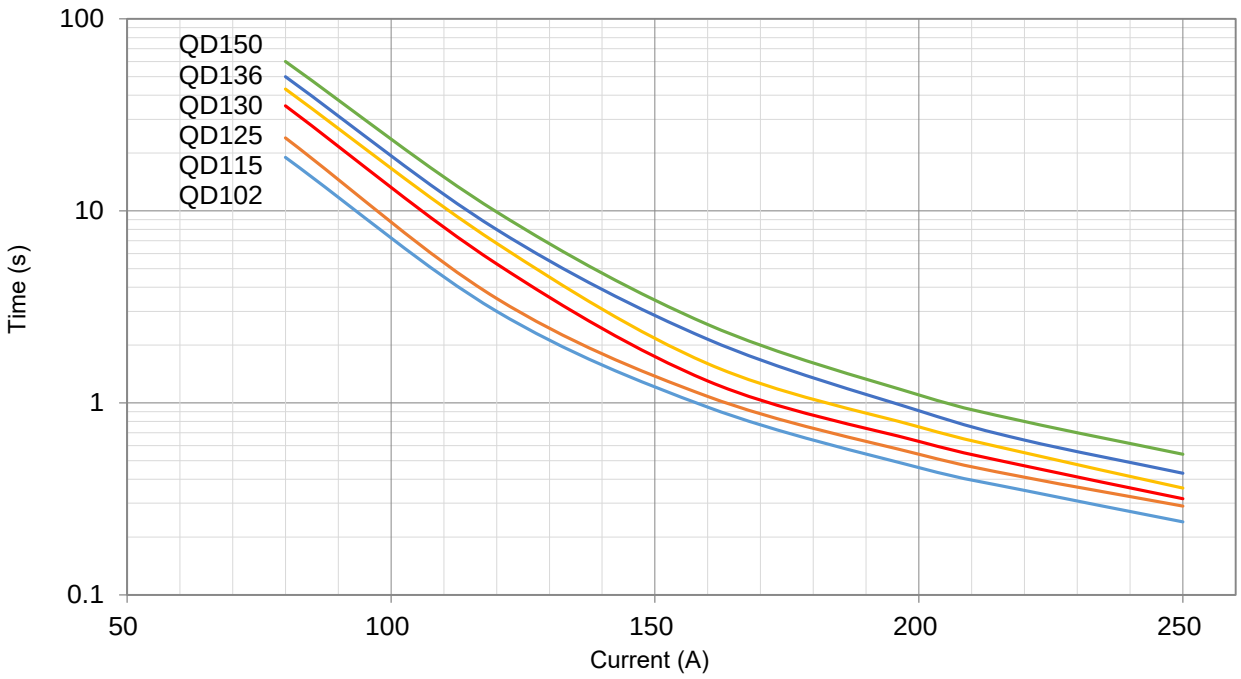

All Rights Reserved by Xiamen SET Electronics Co., Ltd. 2021-2023 V2.3

Applications

- Home Electrical Appliances
- Electric Heating Appliances

Features

- High Accuracy of Functioning Temp.
- Non-Resettable
- Make a Mounting Hole
- Lead Wire is Insulated
- RoHS & REACH Compliant

Customization

- Temp.
- The Length of Lead Wires
- Lead Wires can Make Pluggable Terminals

ATCO

Agency Approvals

Agency Mark	Standards	No.
	UL 60691	E214712
	CAN-CSA-E60691	E214712
	EN 60691	R50264747
	GB 9816.1	2020980205000182

Dimensions (mm)

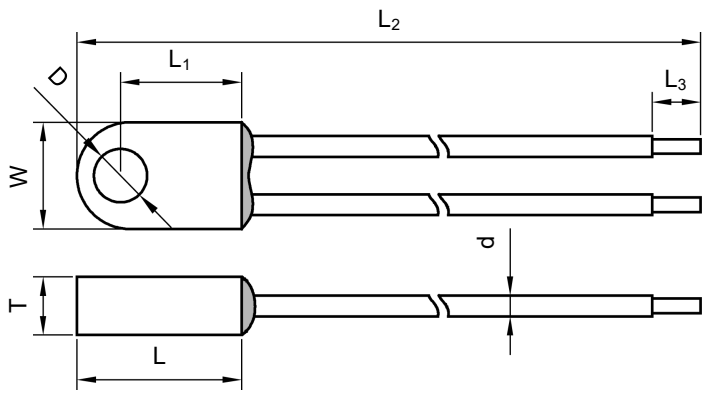

L	L_1	L_2	L_3	W	T	D	d
17.0 ± 1.0	12.5 ± 1.0	78.0 ± 3.0	5.0 ± 1.0	11.0 ± 1.0	6.0 ± 0.5	5.5 ± 1.0	UL1332 18AWG

All Rights Reserved by Xiamen SET Electronics Co., Ltd. 2021-2023 V2.3

Specifications

Model	T_f	Fusing Temp.	T_h	T_m	I_r	U_r	UL	cUL	TUV	CCC	RoHS REACH
	(°C)	(°C)	(°C)	(°C)	(A)	(V)					
SK102	102	98 ± 2	72	200	10	AC 250	○	○	●	●	●
SK115	115	111 ± 2	85	200	10	AC 250	○	○	●	●	●
SK125	125	121 ± 2	95	200	10	AC 250	○	○	●	●	●
SK130	130	125 ± 2	100	200	10	AC 250	○	○	●	●	●
SK135	135	130 ± 2	105	200	10	AC 250	○	○	●	●	●
SK145	145	140 ± 2	115	200	10	AC 250	○	○	●	●	●
SK150	150	145 ± 2	120	200	10	AC 250	○	○	●	●	●
SK160	160	155 ± 2	130	200	10	AC 250	○	○	●	●	●
SK205	205	199 ± 3	167	250	10	AC 250	●	●	●	●	●
SK221	221	218 ± 2	186	250	10	AC 250	●	●	●	●	●

Note:
"● "Means certificated.
"○ "Means non-certificated.

All Rights Reserved by Xiamen SET Electronics Co., Ltd. 2021-2023 V2.3

Packaging Information

Bulk

Item	PE Bag	Carton
Dimensions (mm)	190 × 180	440 × 300 × 260
Quantity (PCS)	50	3000
Gross Weight (kg)		18.0± 10%

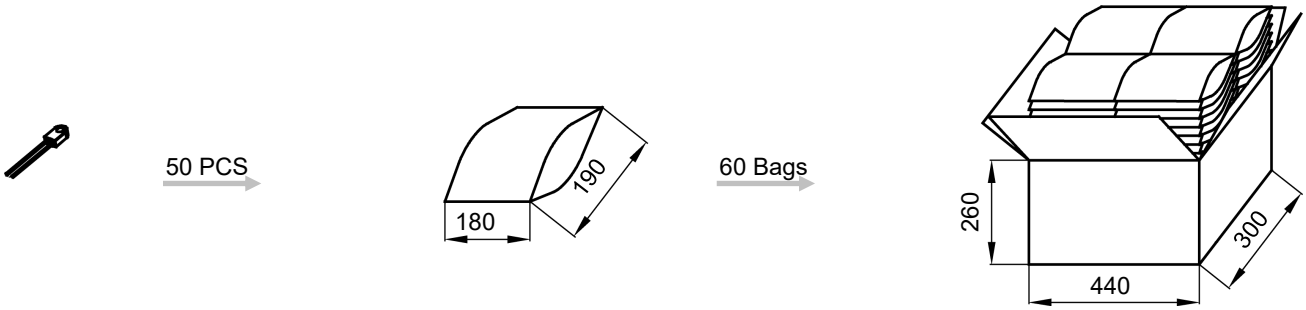

ATCO

All Rights Reserved by Xiamen SET Electronics Co., Ltd. 2021-2023 V2.3

Product Temp.-Time Curve (For Reference Only)

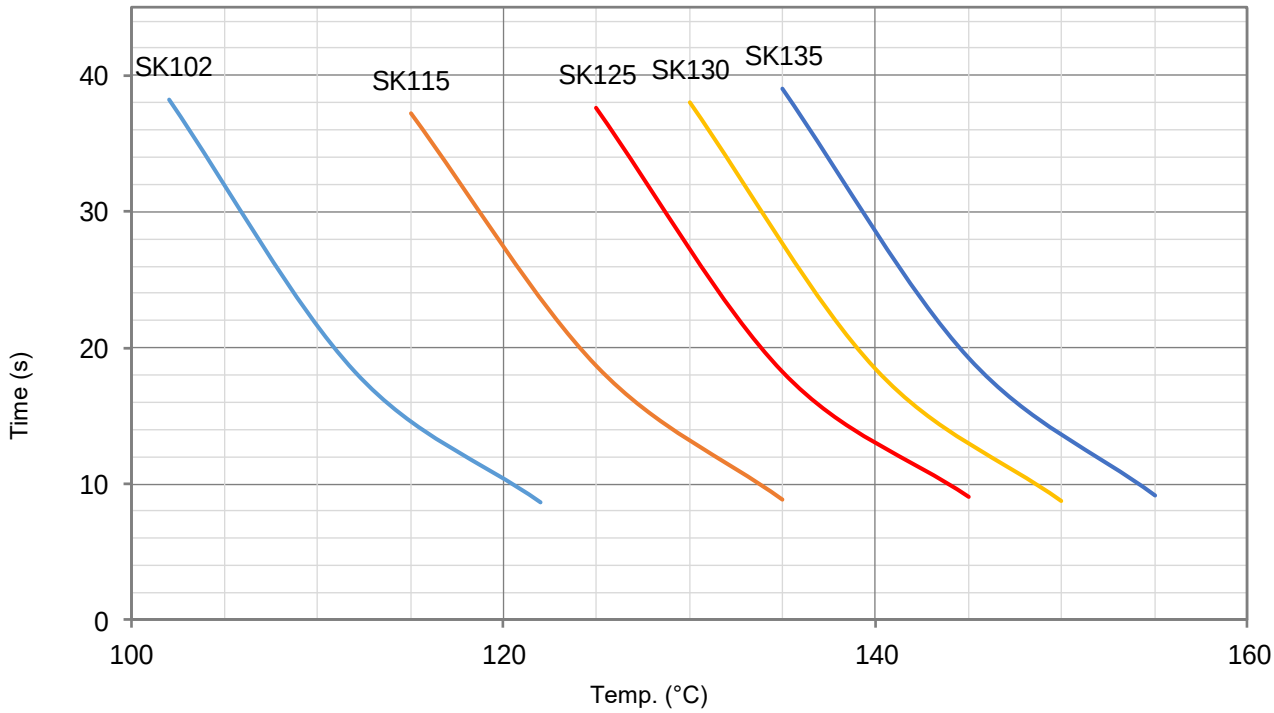

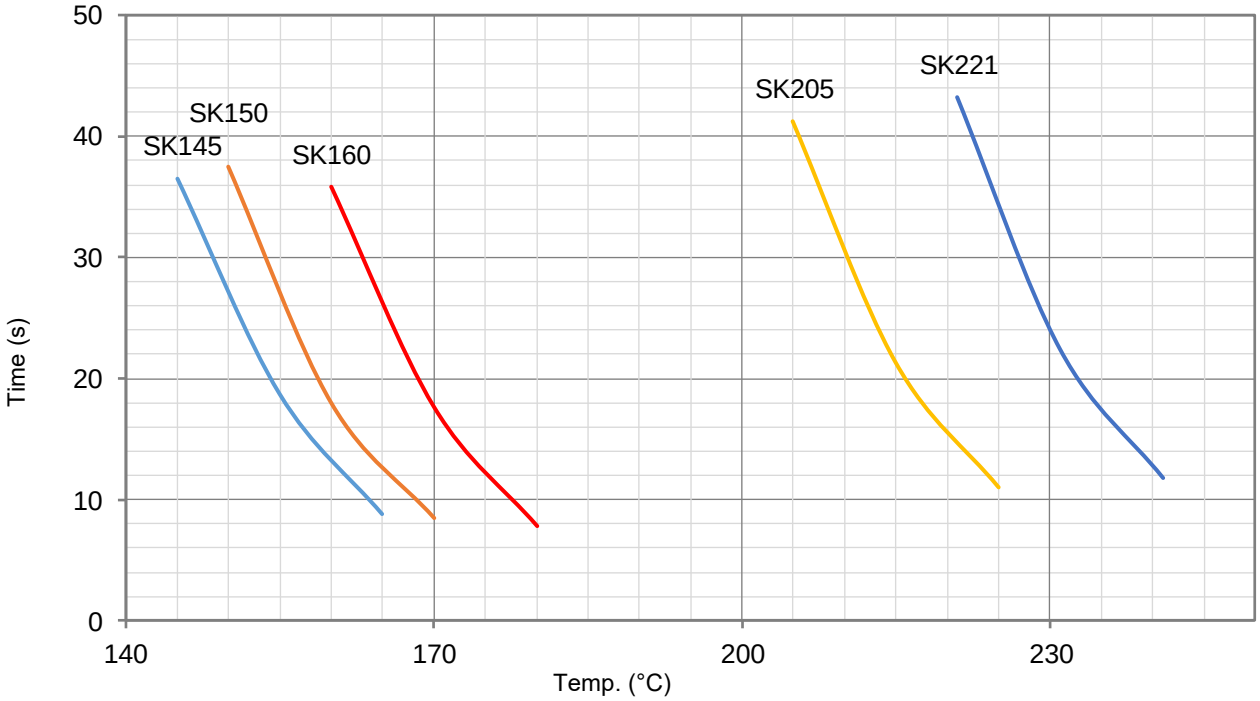

All Rights Reserved by Xiamen SET Electronics Co., Ltd. 2021-2023 V2.3

Product Current-Time Curve (For Reference Only)

The Current-Time Curve shows functioning time at multi-times rated current at room temperature 25 ± 2 °C.

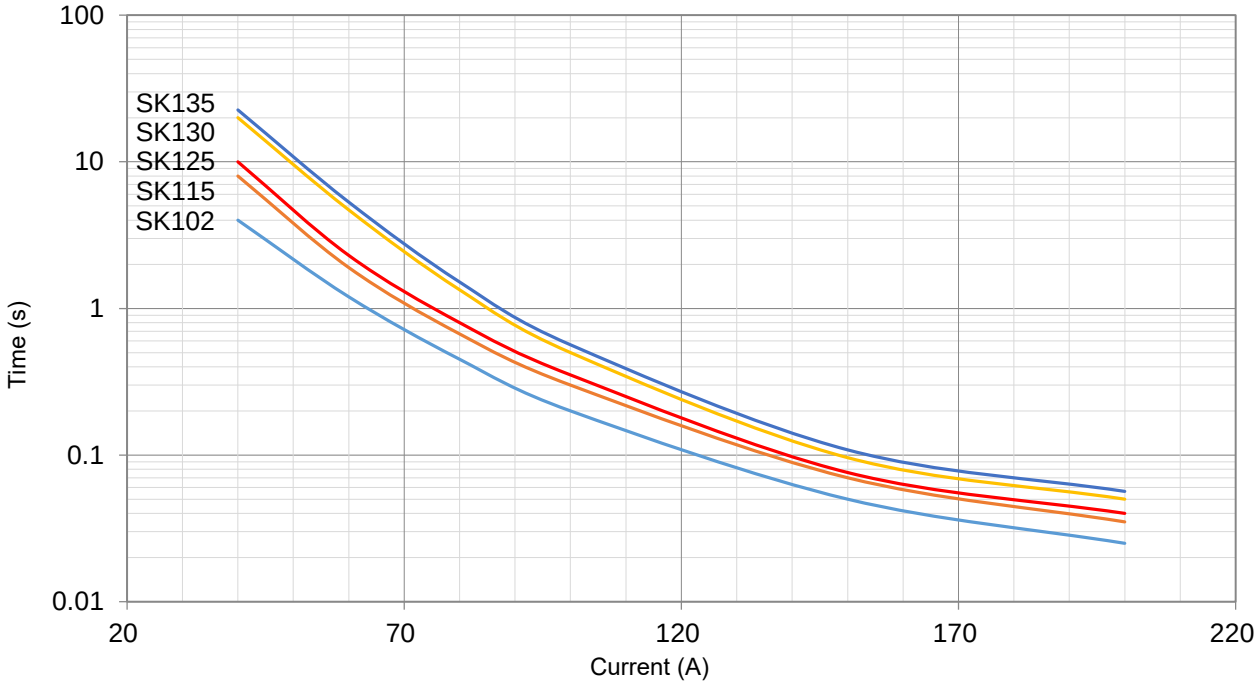

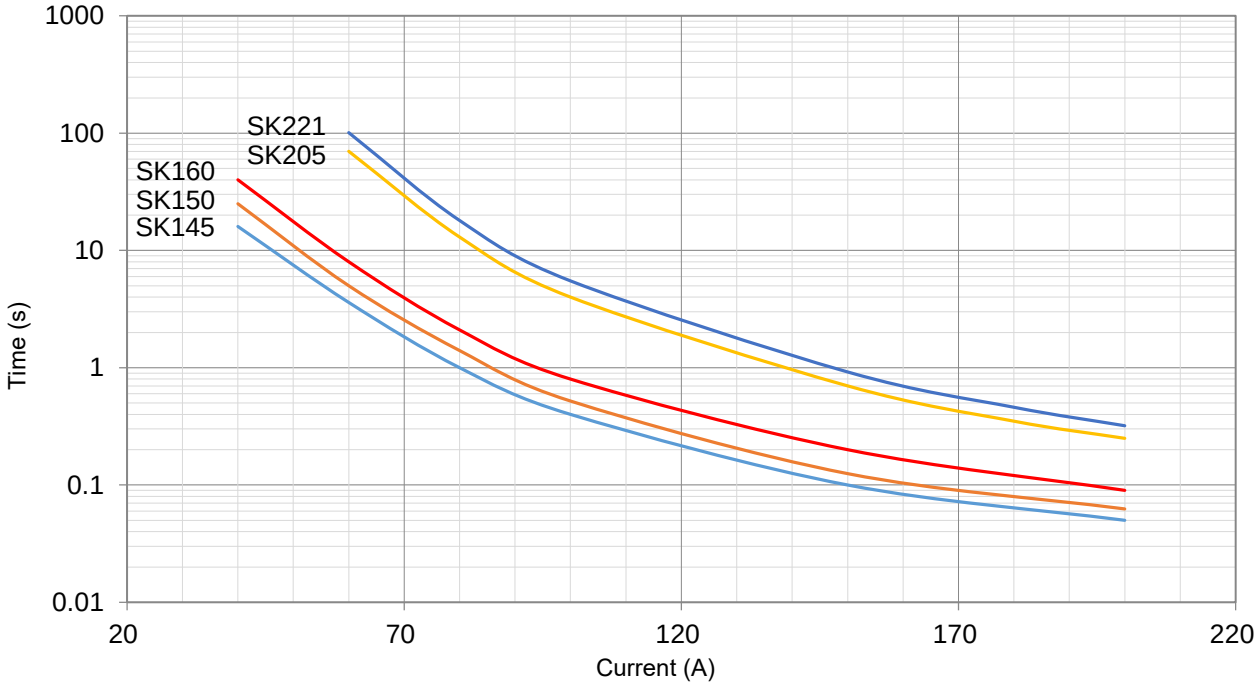

All Rights Reserved by Xiamen SET Electronics Co., Ltd. 2021-2023 V2.3

Applications

- Home Electrical Appliances
- Electric Heating Appliances

Features

- High Accuracy of Functioning Temp.
- Non-Resettable
- Make a Mounting Hole
- Lead Wire is Insulated
- RoHS & REACH Compliant

Customization

- Temp.
- The Length of Lead Wires
- Lead Wires can Make Pluggable Terminals

Agency Approvals

Agency Mark	Standards	No.
	UL 60691	E214712
	CAN-CSA-E60691	E214712
	EN 60691	R50264747
	GB 9816.1	2020980205000182

Dimensions (mm)

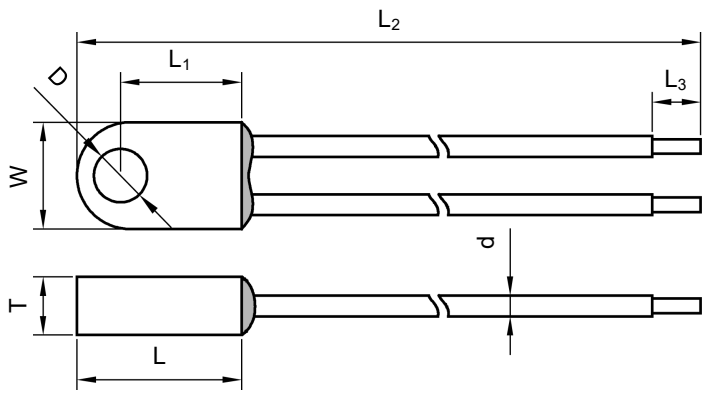

L	L_1	L_2	L_3	W	T	D	d
17.0 ± 1.0	12.5 ± 1.0	78.0 ± 3.0	5.0 ± 1.0	11.0 ± 1.0	6.0 ± 0.5	5.5 ± 1.0	UL1332 18AWG

All Rights Reserved by Xiamen SET Electronics Co., Ltd. 2021-2023 V2.3

Specifications

Model	T_f	Fusing Temp.	T_h	T_m	I_r	U_r	UL	cUL	TUV	CCC	RoHS REACH
	(°C)	(°C)	(°C)	(°C)	(A)	(V)					
TK102	102	98 ± 2	72	200	15 / 16	250	○	○	●	●	●
TK115	115	111 ± 2	85	200	15 / 16	250	○	○	●	●	●
TK125	125	121 ± 2	95	200	15 / 16	250	○	○	●	●	●
TK130	130	125 ± 2	100	200	15 / 16	250	○	○	●	●	●
TK135	135	130 ± 2	105	200	15 / 16	250	○	○	●	●	●
TK145	145	140 ± 2	115	200	15 / 16	250	○	○	●	●	●
TK150	150	145 ± 2	120	200	15 / 16	250	○	○	●	●	●
TK160	160	155 ± 2	130	200	15 / 16	250	○	○	●	●	●
TK205	205	199 ± 3	167	250	15 / 16	250	●	●	●	●	●
TK221	221	218 ± 2	186	250	15 / 16	250	●	●	●	●	●

Note:
"● "Means certificated.
"○ "Means non-certificated.

All Rights Reserved by Xiamen SET Electronics Co., Ltd. 2021-2023 V2.3

Packaging Information

Bulk

Item	PE Bag	Carton
Dimensions (mm)	190 × 180	440 × 300 × 260
Quantity (PCS)	50	3000
Gross Weight (kg)		18.0± 10%

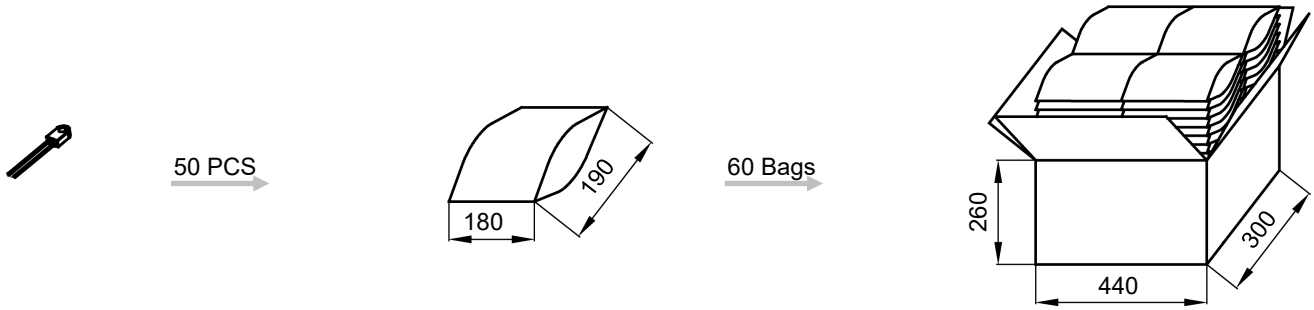

ATCO

All Rights Reserved by Xiamen SET Electronics Co., Ltd. 2021-2023 V2.3

Product Temp.-Time Curve (For Reference Only)

The Temp.-Time Curve of Thermal-Link in different Temp. oil baths.

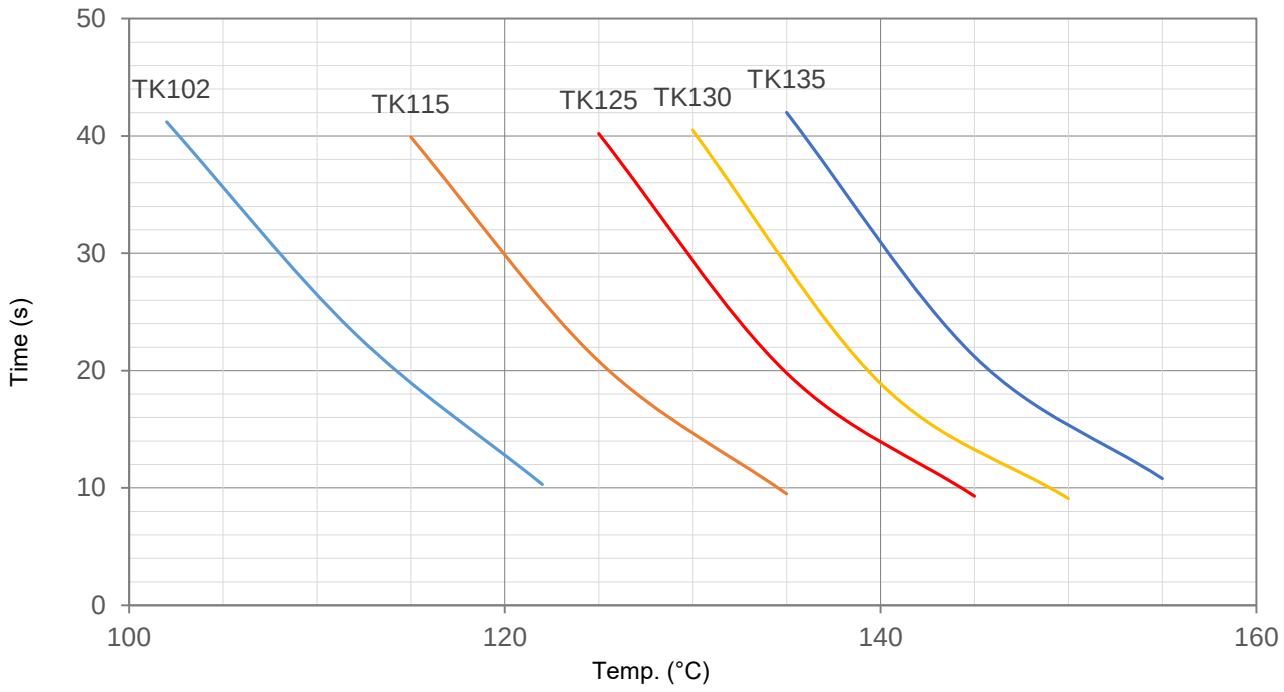

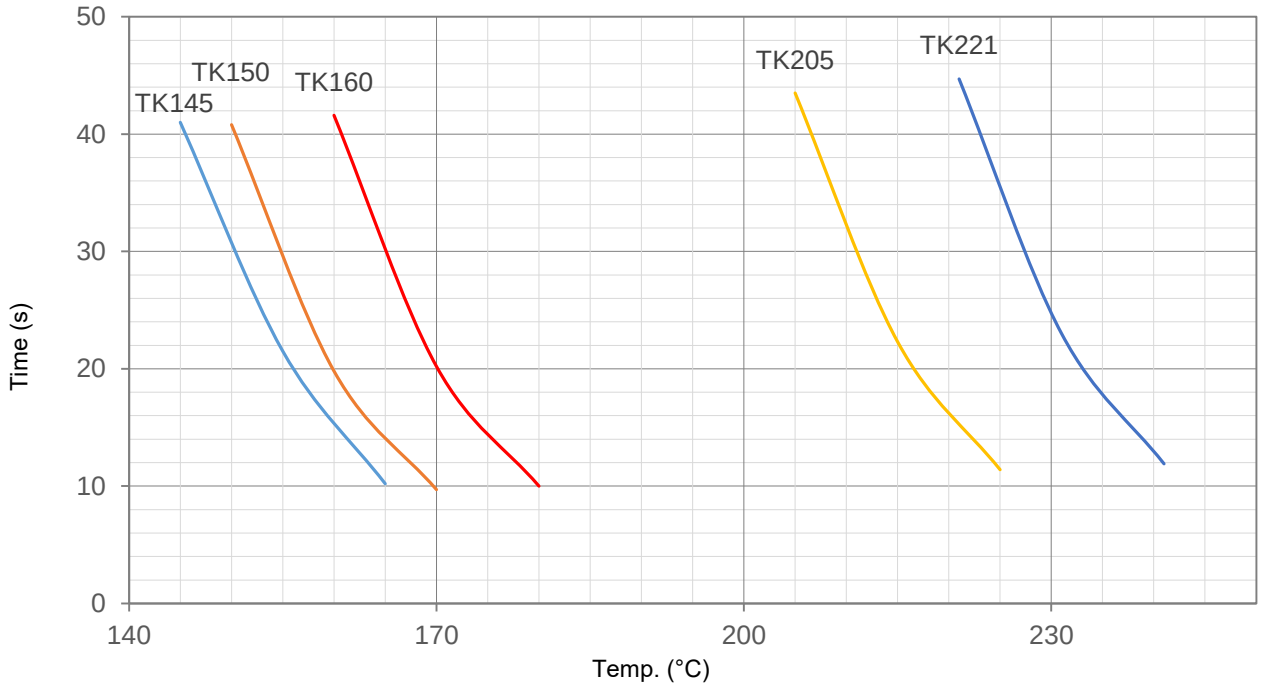

All Rights Reserved by Xiamen SET Electronics Co., Ltd. 2021-2023 V2.3

Product Current-Time Curve (For Reference Only)

The Current-Time Curve shows functioning time at multi-times rated current at room temperature 25 ± 2 °C.

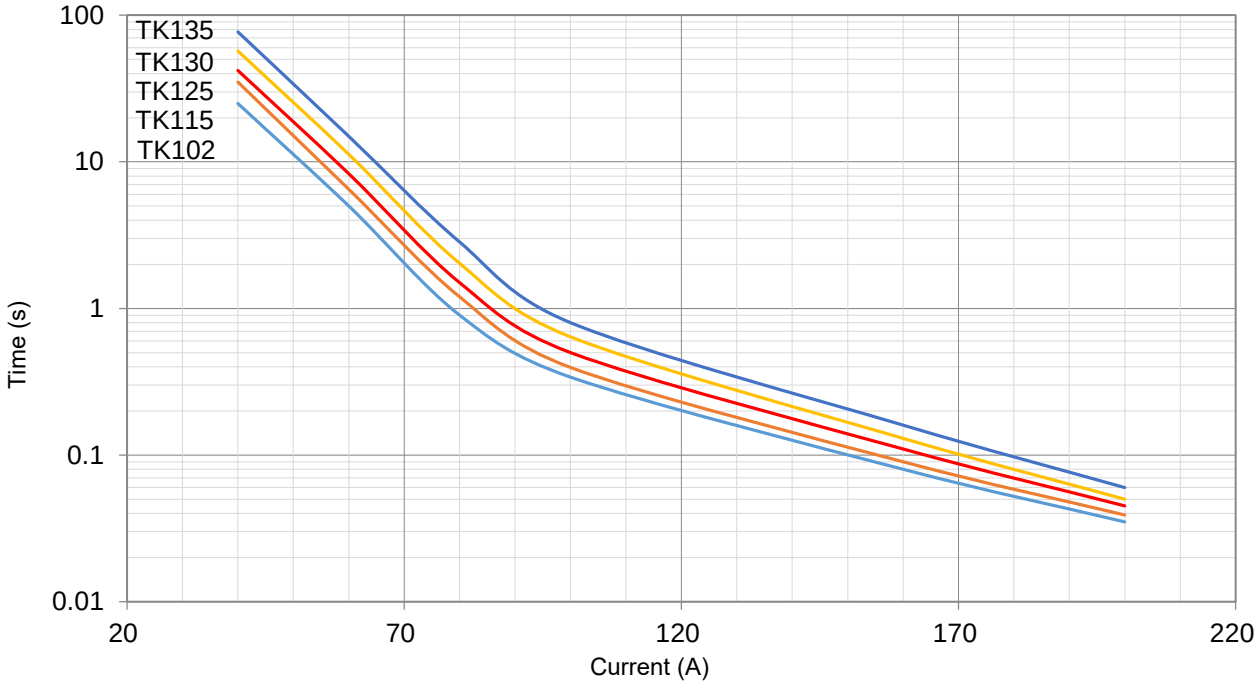

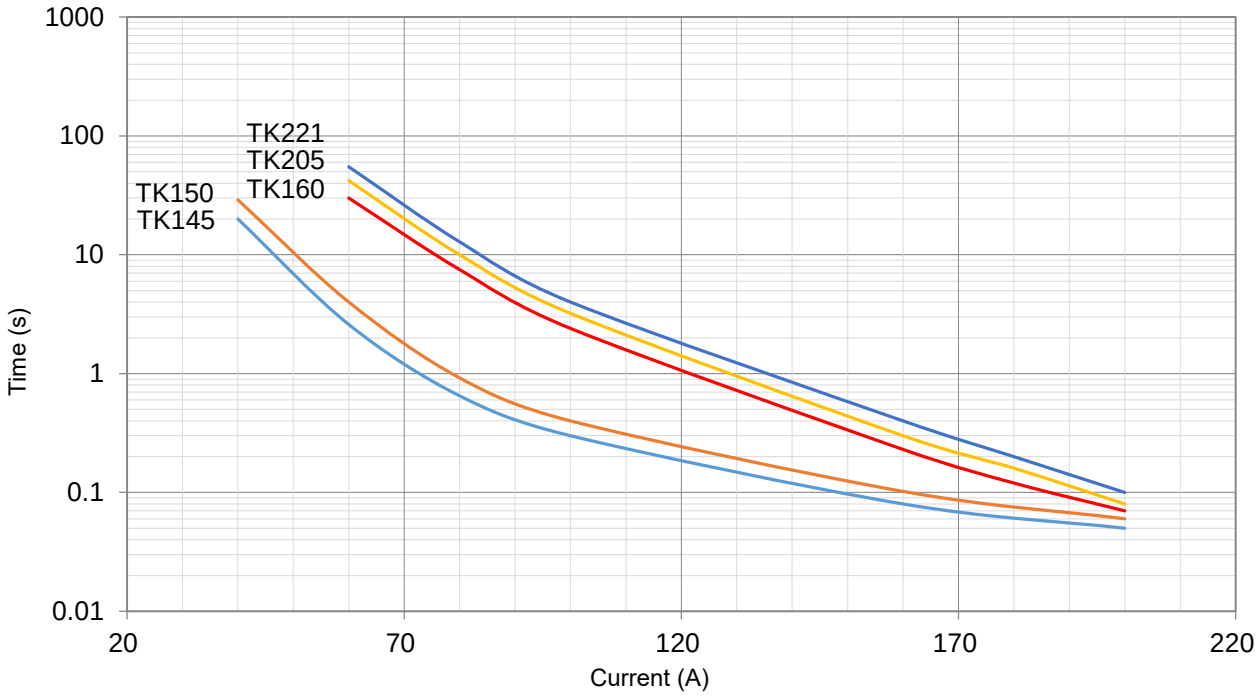

All Rights Reserved by Xiamen SET Electronics Co., Ltd. 2021-2023 V2.3

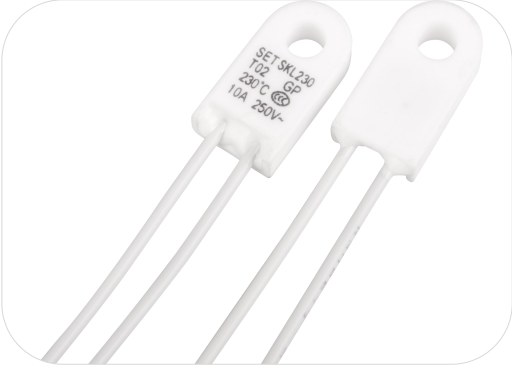

Applications

- Home Electrical Appliances
- Electric Heating Appliances

Features

- High Accuracy of Functioning Temp.
- Non-Resettable
- Make a Mounting Hole
- Lead Wire is Insulated
- RoHS & REACH Compliant

Customization

- Temp.
- The Length of Lead Wires
- Lead Wires can Make Pluggable Terminals

Agency Approvals

Agency Mark	Standards	No.
TÜVRheinland	EN 60691	R50264747
CCC	GB 9816.1	2020980205000179

Dimensions (mm)

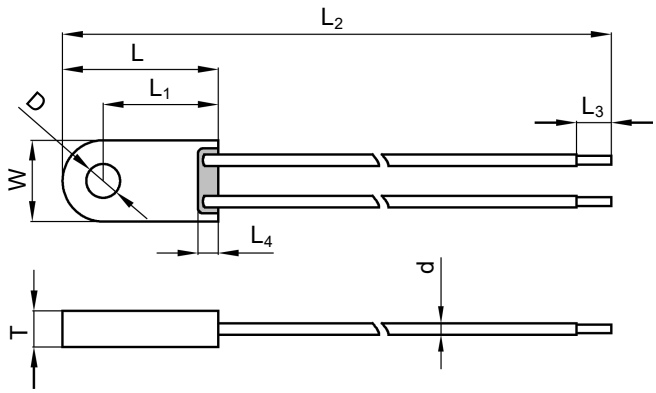

L	L_1	L_2	L_3	L_4	W	T	D	d
23.0 ± 1.0	17.0 ± 1.0	93.0 ± 3.0	5.0 ± 1.0	3.0 ± 0.5	12.0 ± 1.0	5.3 ± 0.5	5.0 ± 1.0	UL1332 18AWG

All Rights Reserved by Xiamen SET Electronics Co., Ltd. 2021-2023 V2.3

Specifications

Model	T_f	Fusing Temp.	T_h	T_m	I_r	U_r	TUV	CCC	RoHS REACH
	(°C)	(°C)	(°C)	(°C)	(A)	(V)	TUV	CCC	
SKL200	200	196 ± 3	160	380	10	AC 250	●	●	●
SKL230	230	225 ± 2	190	380	10	AC 250	●	●	●

Note:
"● "Means certificated.
"○ "Means non-certificated.

Packaging Information

Bulk

Item	PE Bag	Carton
Dimensions (mm)	190 × 180	440 × 300 × 260
Quantity (PCS)	50	3000
Gross Weight (kg)		17.5± 10%

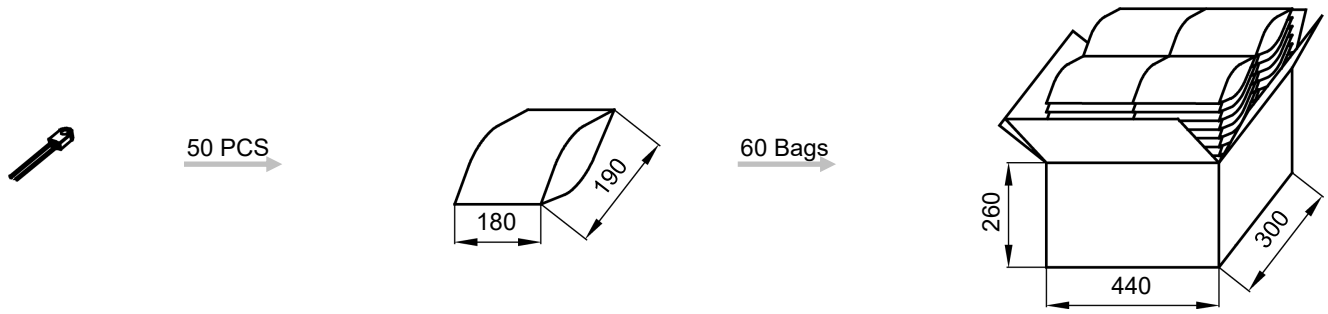

All Rights Reserved by Xiamen SET Electronics Co., Ltd. 2021-2023 V2.3

Product Temp.-Time Curve (For Reference Only)

The Temp.-Time Curve of Thermal-Link in different Temp. oil baths.

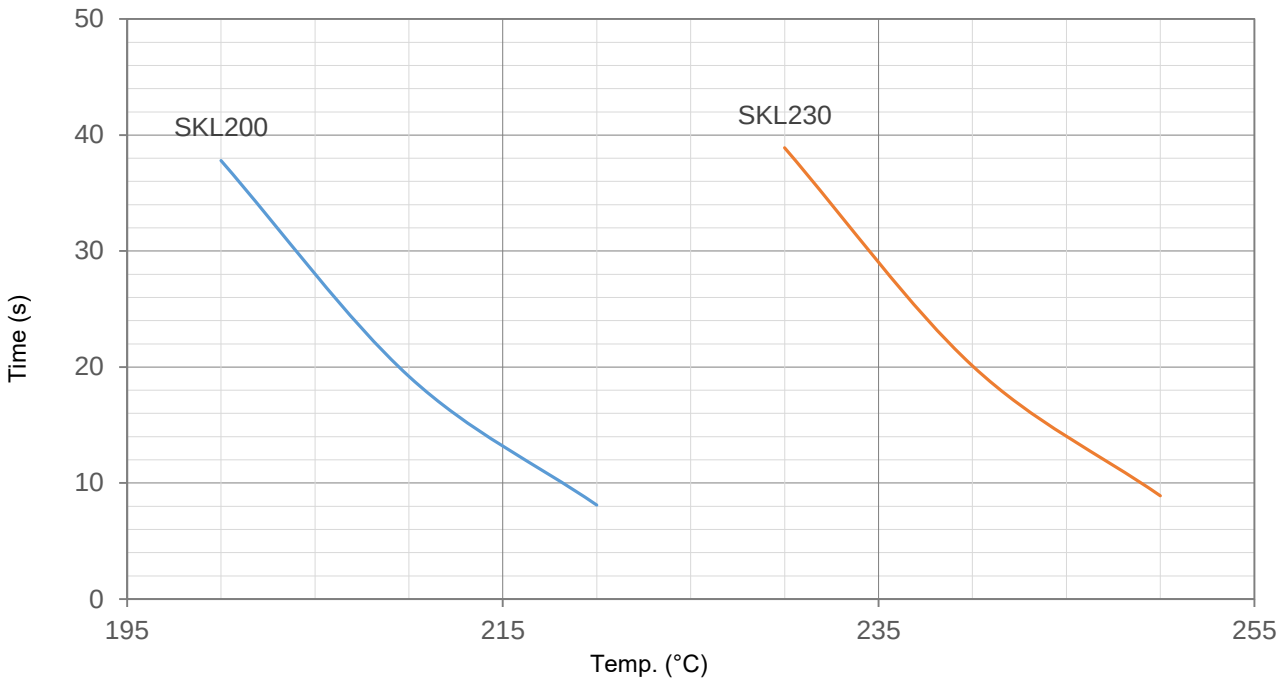

Product Current-Time Curve (For Reference Only)

The Current-Time Curve shows functioning time at multi-times rated current at room temperature 25 ± 2 °C.

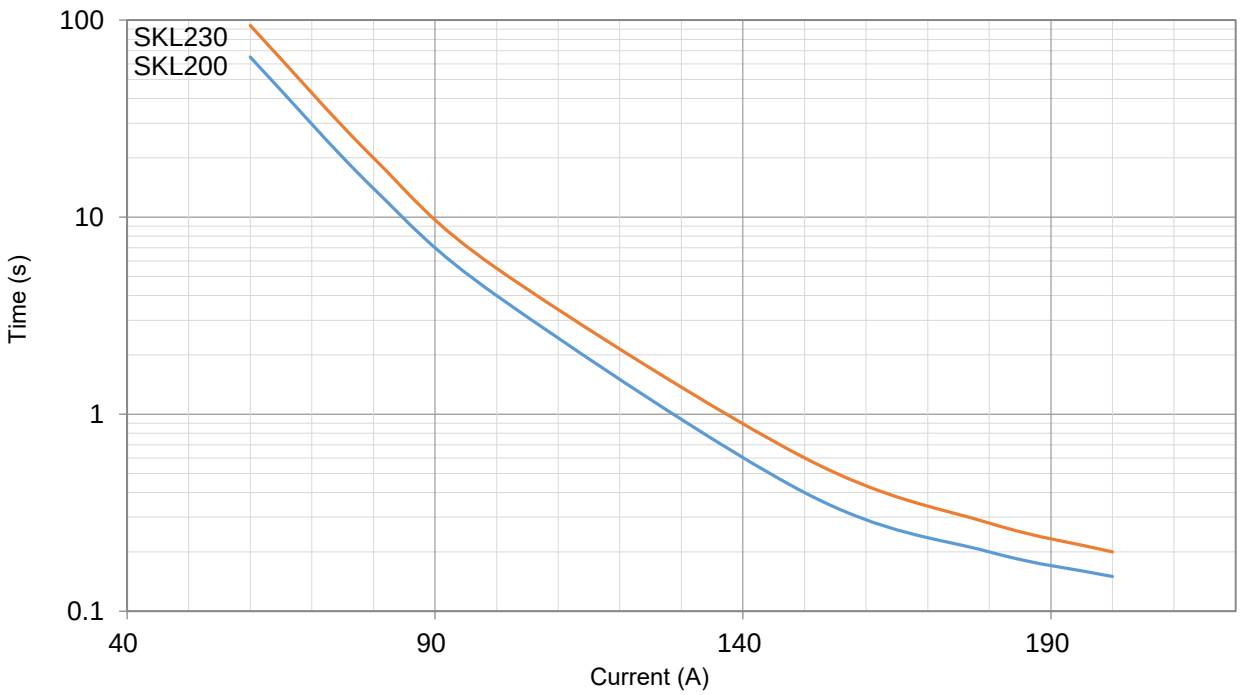

All Rights Reserved by Xiamen SET Electronics Co., Ltd. 2021-2023 V2.3

Applications

- Home Electrical Appliances
- Electric Heating Appliances

Features

- High Accuracy of Functioning Temp.
- Non-Resettable
- Make a Mounting Hole
- Lead Wire is Insulated
- RoHS & REACH Compliant

Customization

- Temp.
- The Length of Lead Wires
- Lead Wires can Make Pluggable Terminals

Agency Approvals

Agency Mark	Standards	No.
CCC	GB 9816.1	2020980205000181

Dimensions (mm)

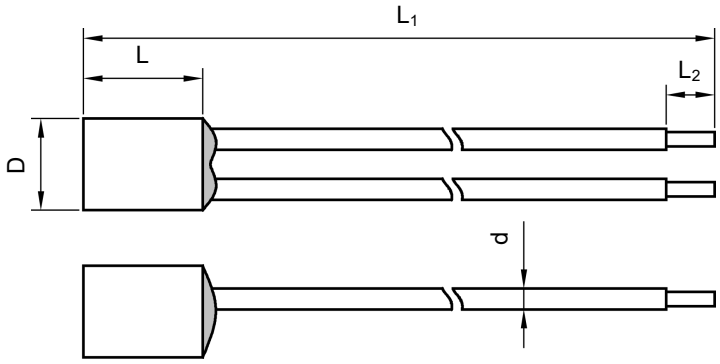

L	L_1	L_2	D	d
13.0 ± 1.0	70.0 ± 3.0	5.0 ± 1.0	9.0 ± 1.0	UL1332 18AWG

All Rights Reserved by Xiamen SET Electronics Co., Ltd. 2021-2023 V2.3

Specifications

Model	T_f	Fusing Temp.	T_h	T_m	I_r	U_r	CCC	RoHS REACH
	(°C)	(°C)	(°C)	(°C)	(A)	(V)	CCC	
SY95	95	91 ± 2	60	180	10	AC 250	●	●
SY105	105	100 ± 2	72	180	10	AC 250	●	●
SY115	115	111 ± 2	85	180	10	AC 250	●	●
SY120	120	115 ± 2	90	180	10	AC 250	●	●
SY125	125	121 ± 2	95	180	10	AC 250	●	●
SY130	130	125 ± 2	100	180	10	AC 250	●	●
SY145	145	140 ± 2	115	180	10	AC 250	●	●

Note:
"● "Means certificated.
"○ "Means non-certificated.

Packaging Information

Bulk

Item	PE Bag	Carton
Dimensions (mm)	190 × 180	440 × 300 × 260
Quantity (PCS)	50	3000
Gross Weight (kg)		14 ± 10%

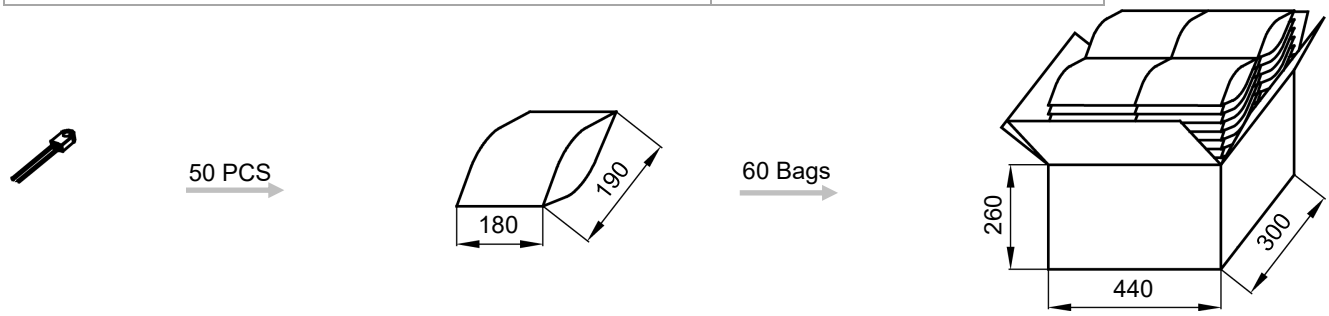

All Rights Reserved by Xiamen SET Electronics Co., Ltd. 2021-2023 V2.3

Product Temp.-Time Curve (For Reference Only)

The Temp.-Time Curve of Thermal-Link in different Temp. oil baths.

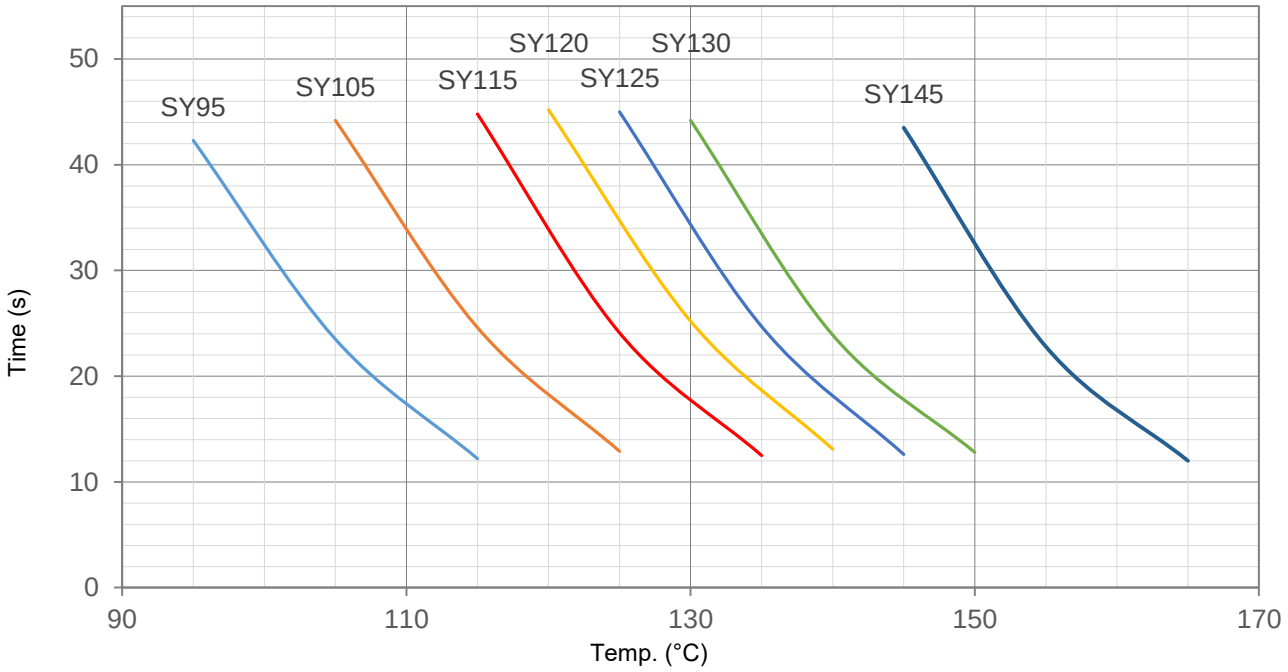

Product Current-Time Curve (For Reference Only)

The Current-Time Curve shows functioning time at multi-times rated current at room temperature 25 ± 2 °C.

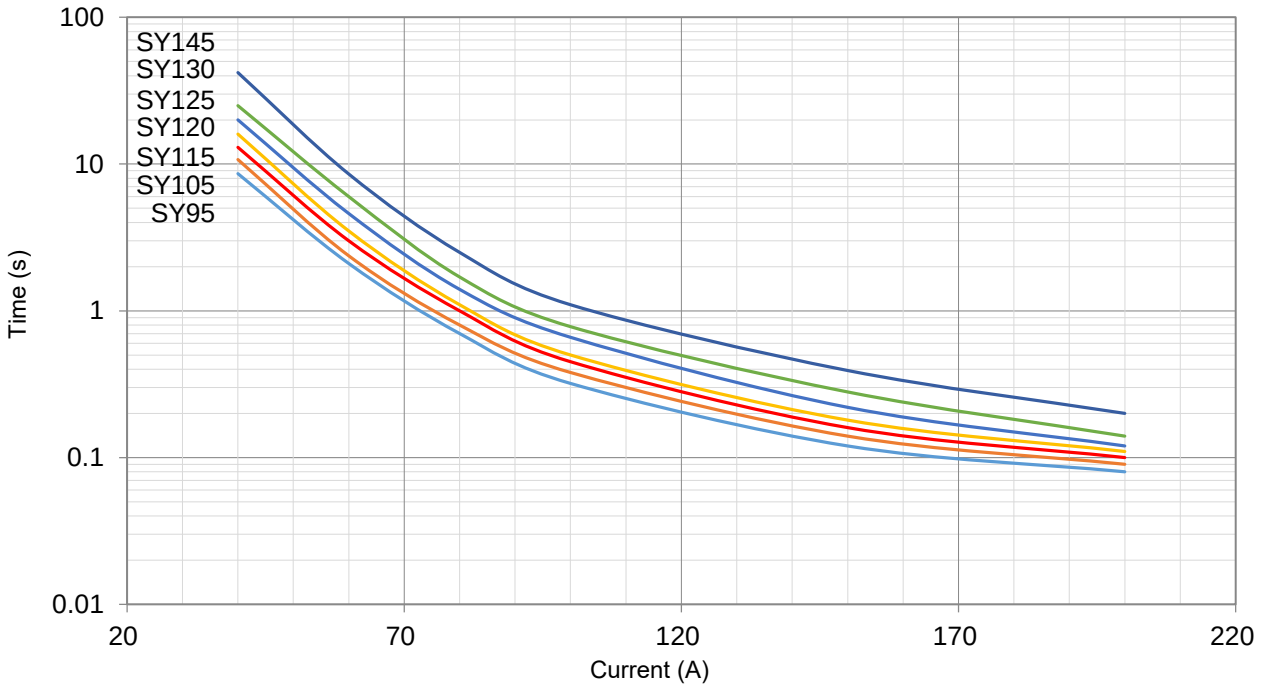

All Rights Reserved by Xiamen SET Electronics Co., Ltd. 2021-2023 V2.3

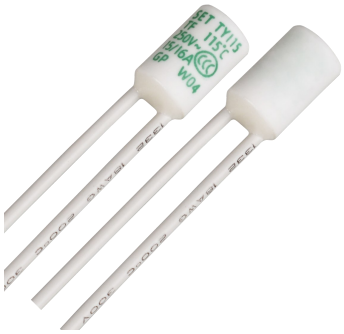

Applications

- Home Electrical Appliances
- Electric Heating Appliances

Features

- High Accuracy of Functioning Temp.
- Non-Resettable
- Make a Mounting Hole
- Lead Wire is Insulated
- RoHS & REACH Compliant

Customization

- Temp.
- The Length of Lead Wires
- Lead Wires can Make Pluggable Terminals

ATCO

Agency Approvals

Agency Mark	Standards	No.
CCC	GB 9816.1	2020980205000181

Dimensions (mm)

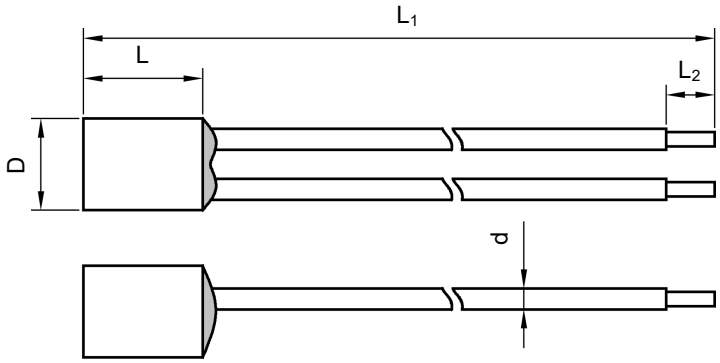

L	L_1	L_2	D	d
13.0 ± 1.0	70.0 ± 3.0	5.0 ± 1.0	9.0 ± 1.0	UL1332 18AWG

All Rights Reserved by Xiamen SET Electronics Co., Ltd. 2021-2023 V2.3

Specifications

Model	T_f	Fusing Temp.	T_h	T_m	I_r	U_r	CCC	RoHS REACH
	(°C)	(°C)	(°C)	(°C)	(A)	(V)	CCC	
TY95	95	91 ± 2	60	180	15 / 16	250	●	●
TY105	105	100 ± 2	72	180	15 / 16	250	●	●
TY115	115	111 ± 2	85	180	15 / 16	250	●	●
TY120	120	115 ± 2	90	180	15 / 16	250	●	●
TY125	125	121 ± 2	95	180	15 / 16	250	●	●
TY130	130	125 ± 2	100	180	15 / 16	250	●	●
TY145	145	140 ± 2	115	180	15 / 16	250	●	●

Note:
"● "Means certificated.
"○ "Means non-certificated.

Packaging Information

Bulk

Item	PE Bag	Carton
Dimensions (mm)	190 × 180	440 × 300 × 260
Quantity (PCS)	50	3000
Gross Weight (kg)		14.0± 10%

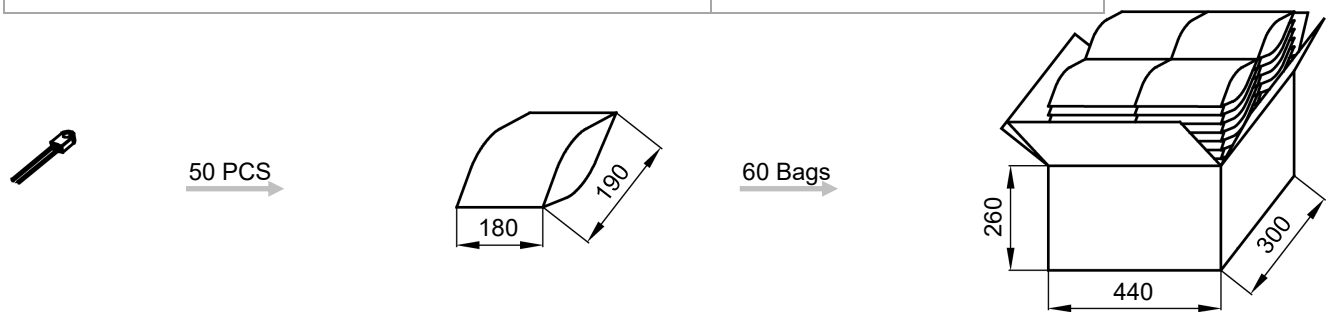

All Rights Reserved by Xiamen SET Electronics Co., Ltd. 2021-2023 V2.3

Product Temp.-Time Curve (For Reference Only)

The Temp.-Time Curve of Thermal-Link in different Temp. oil baths.

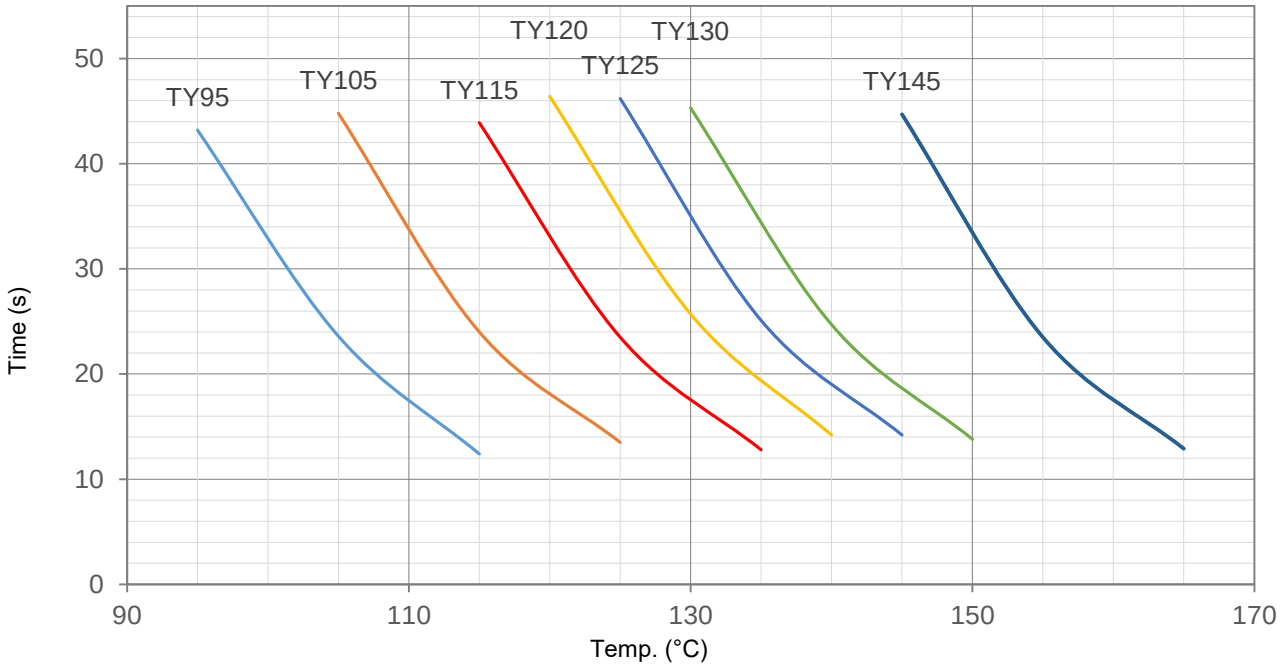

Product Current-Time Curve (For Reference Only)

The Current-Time Curve shows functioning time at multi-times rated current at room temperature 25 ± 2 °C.

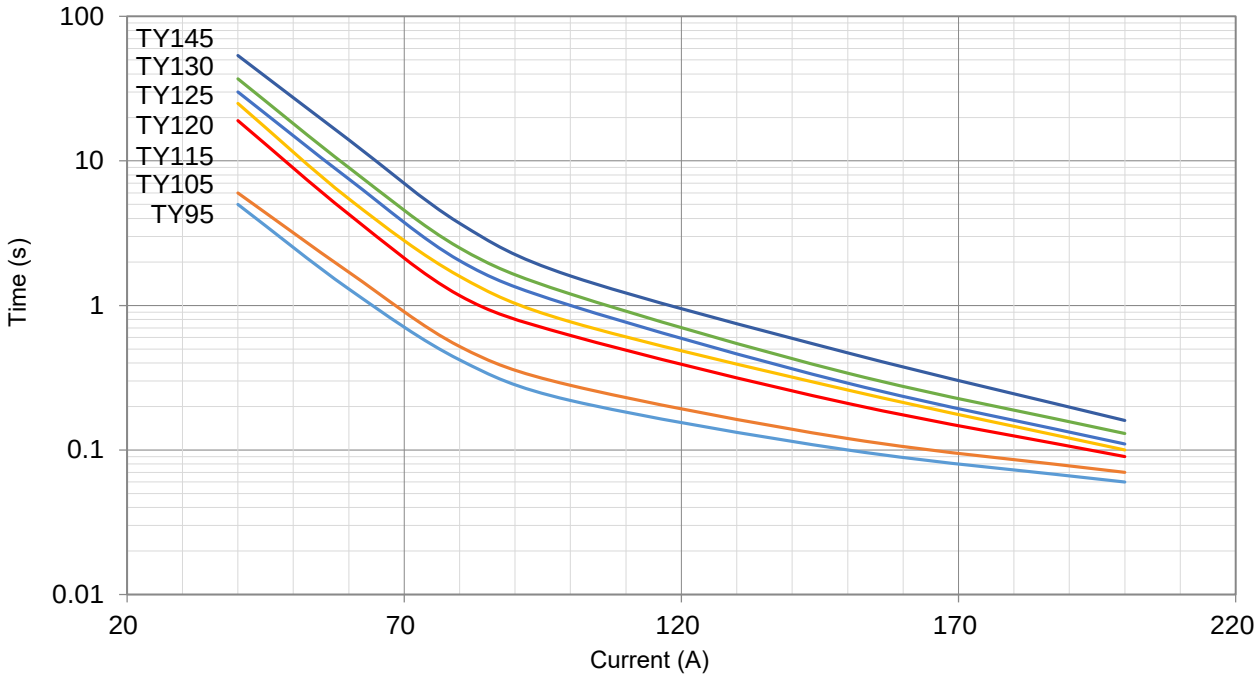

All Rights Reserved by Xiamen SET Electronics Co., Ltd. 2021-2023 V2.3

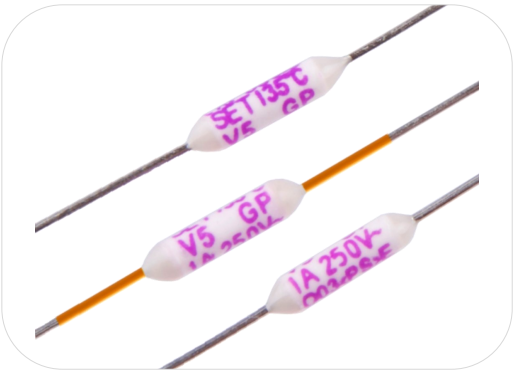

Applications

- Lamps
- Switched-Mode Power Supplies
- Home Electrical Appliances
- Transformers
- Motors
- Electric Blankets
- Electric Aroma Diffusers

Features

- High Accuracy of Functioning Temp.
- Non-Resettable
- RoHS & REACH Compliant

Customization

- Temp.
- The Length of Lead Wires
- Taping Packing Available
- Lead Wires can be Insulated
- Tinned Copper Wires or CP Wires

Agency Approvals

Agency Mark	Standards	No.
	UL 60691	E214712
	CAN-CSA-E60691	E214712
	EN 60691	R50112716
	J60691	JET2121-32001-2021、JET2121-32001-2022 JET2121-32001-2023、JET2121-32001-2024 JET2121-32001-2025、JET2121-32001-2026
	K60691	SU05023-11001、SU05023-11002 SU05023-11003
	GB 9816.1	2020980205000185 、2020980205000183

Dimensions (mm)

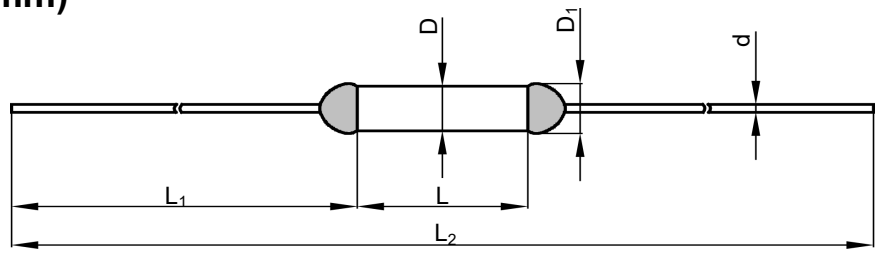

V series conventional products	L	L_1	L_2	D	D_1	d
	6.5 ± 0.5	36.0 ± 2.0	78.5 ± 3.0	2.1 ± 0.5	≤ 2.6	0.50 ± 0.05
V16/V31/V32	L	L_1	L_2	D	D_1	d
	9.0 ± 0.5	35.0 ± 2.0	79.0 ± 3.0	2.5 ± 0.5	≤ 3.0	0.54 ± 0.05

All Rights Reserved by Xiamen SET Electronics Co., Ltd. 2021-2023 V2.3

Specifications

Model	T_f	Fusing Temp.	T_h	T_m	I_r	U_r	UL	cUL	TUV	PSE	KC	CCC	RoHS REACH
	(°C)	(°C)	(°C)	(°C)	(A)	(V)							
V0	76	73 ± 2	53	200	1	AC 250	○	○	●	●	●	●	●
						AC 125	●	●	○	○	○	○	●
						DC 50	●	●	○	○	○	○	●
V18	86	81 ± 2	61	200	1	AC 250	○	○	●	●	●	●	●
						AC 125	●	●	○	○	○	○	●
						DC 50	●	●	○	○	○	○	●
			55		2.5	DC 60	●	●	●	○	○	○	●
V21	97	93 ± 2	70	200	1	AC 250	○	○	○	○	○	○	●
						AC 125	●	●	○	○	○	○	●
						DC 50	●	●	○	○	○	○	●
V1	102	98 ± 3	79	200	1	AC 250	○	○	●	●	●	●	●
						AC 125	●	●	○	○	○	○	●
						DC 50	●	●	○	○	○	○	●
V2	115	111 ± 2	91	200	1	AC 250	●	●	●	●	●	●	●
						DC 50	●	●	○	○	○	○	●
			80		4	DC 60	●	●	●	○	○	○	●
V3	125	121 ± 2	100	200	1	AC 250	●	●	●	●	●	●	●
						DC 50	●	●	○	○	○	○	●
V4	130	125 ± 2	106	200	1	AC 250	●	●	●	●	●	●	●
						DC 50	●	●	○	○	○	○	●
			100		4	DC 60	●	●	●	○	○	○	●
V8	133	130 ± 2	111	200	1	AC 250	●	●	●	●	●	●	●
						DC 50	●	●	○	○	○	○	●
			80		4	DC 60	●	●	●	○	○	○	●
V5	135	130 ± 2	111	200	1	AC 250	●	●	●	●	●	●	●
						DC 50	●	●	○	○	○	○	●
V9	136	131 ± 2	112	200	1	AC 250	●	●	●	●	●	●	●
						DC 50	●	●	○	○	○	○	●
V13	139	135 ± 2	115	200	1	AC 250	●	●	●	●	●	●	●
						DC 50	●	●	○	○	○	○	●
			90		4	DC 60	●	●	●	○	○	○	●
V6	145	140 ± 2	121	200	1	AC 250	●	●	●	●	●	●	●
						DC 50	●	●	○	○	○	○	●
V7	150	145 ± 2	126	200	1	AC 250	●	●	●	●	●	●	●
						DC 50	●	●	○	○	○	○	●
V16	160	154 ± 2	135	200	1	AC 250	○	○	●	●	○	●	●
						DC 60	○	○	●	○	○	●	●
V17	187	182 ± 3	162	250	1	AC 250	●	●	●	●	●	●	●
						DC 60	●	●	●	○	○	○	●
V32	205	199 ± 3	169	250	1	AC 250	○	○	●	●	○	●	●
						AC 125	●	●	○	○	○	○	●
						DC 60	●	●	●	○	○	●	●
V31	221	218 ± 2	188	250	1	AC 250	●	●	●	●	○	●	●
						AC 125	●	●	○	○	○	○	●
						DC 60	●	●	●	○	○	●	●

Note:

"● "Means certificated.

"○ "Means non-certificated.

All Rights Reserved by Xiamen SET Electronics Co., Ltd. 2021-2023 V2.3

Packaging Information

Bulk

Item	PE Bag	PE Bag	Carton
Dimensions (mm)	135 × 85	190 × 180	440 × 300 × 260
Quantity (PCS)	100	1000	50000
Gross Weight (kg)			11.5 ± 10%

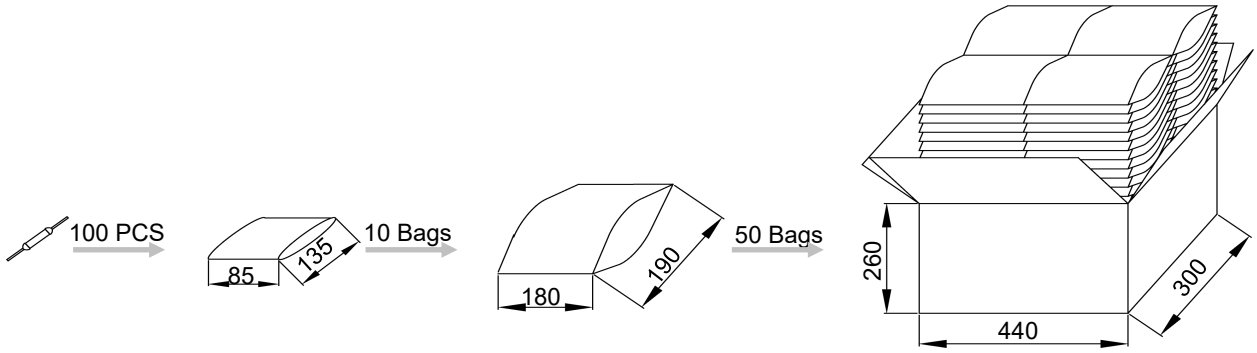

Taping

Item	Scroll	Box	Carton
Dimensions (mm)	Φ 250 × 94	258 × 258 × 98	480 × 300 × 260
Quantity (PCS)	2500	2500	10000
Gross Weight (kg)			4.2 ± 10%

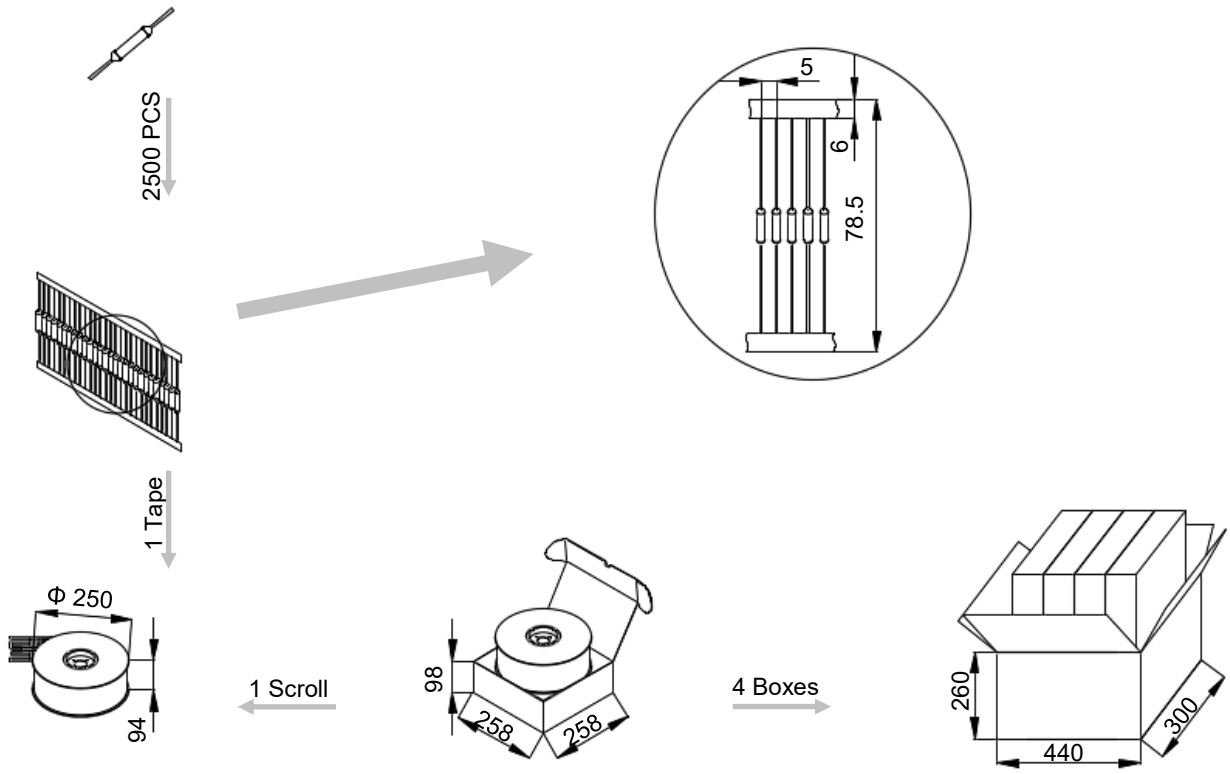

All Rights Reserved by Xiamen SET Electronics Co., Ltd. 2021-2023 V2.3

Product Temp.-Time Curve (For Reference Only)

The Temp.-Time Curve of Thermal-Link in different Temp. oil baths.

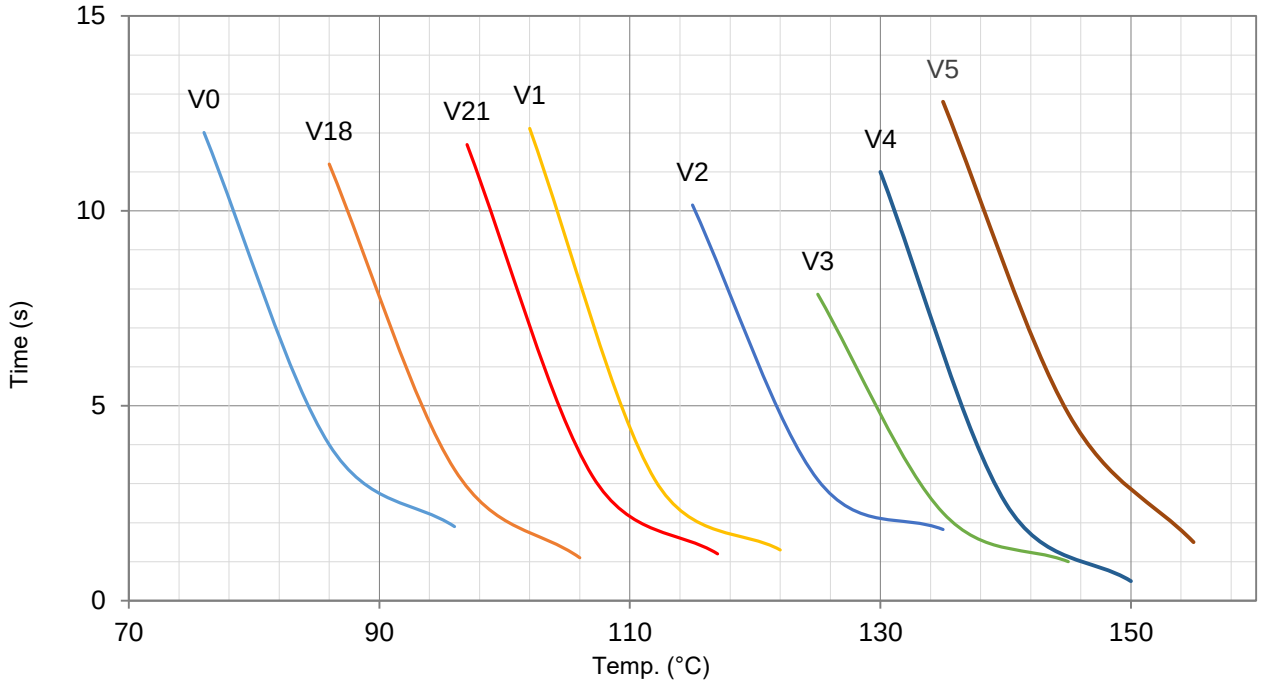

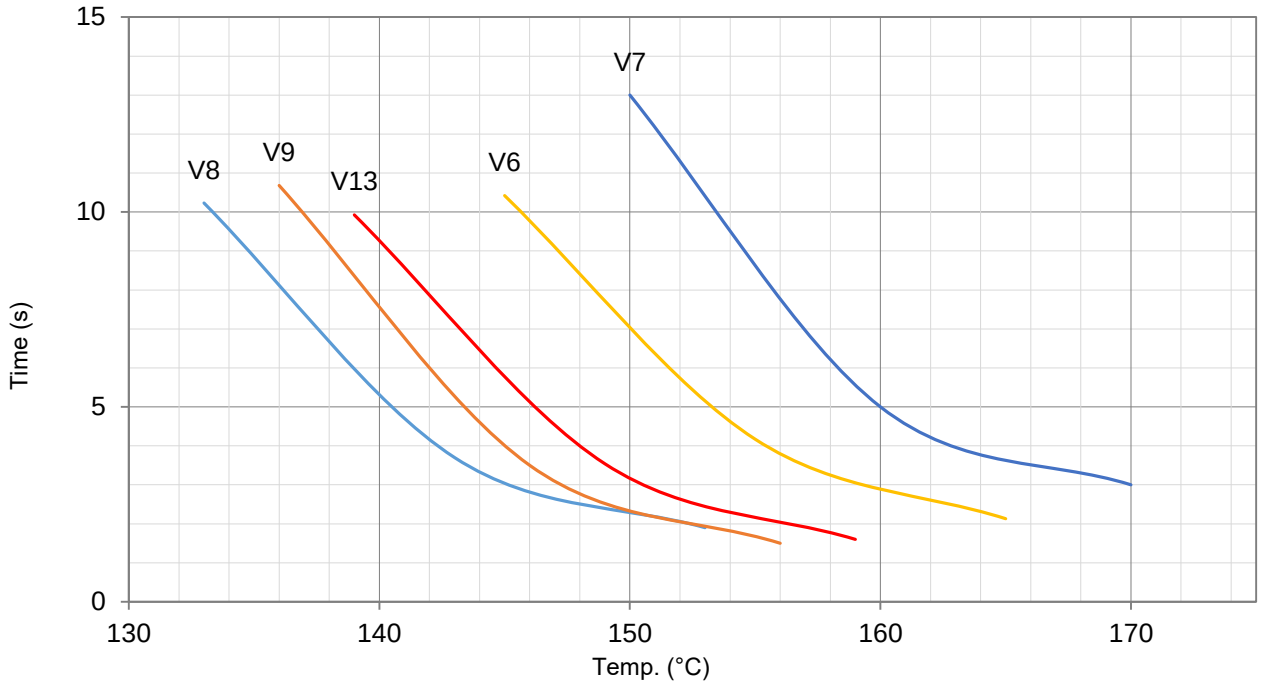

All Rights Reserved by Xiamen SET Electronics Co., Ltd. 2021-2023 V2.3

Product Current-Time Curve (For Reference Only)

The Current-Time Curve shows functioning time at multi-times rated current at room temperature 25 ± 2 °C.

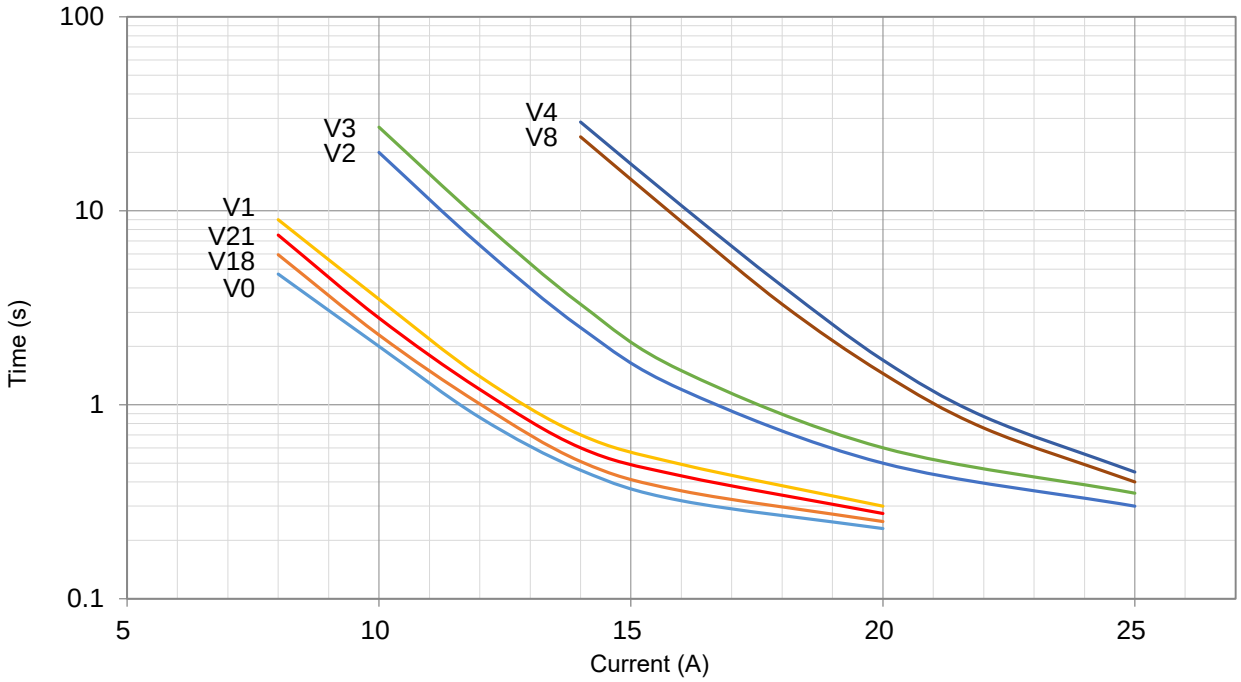

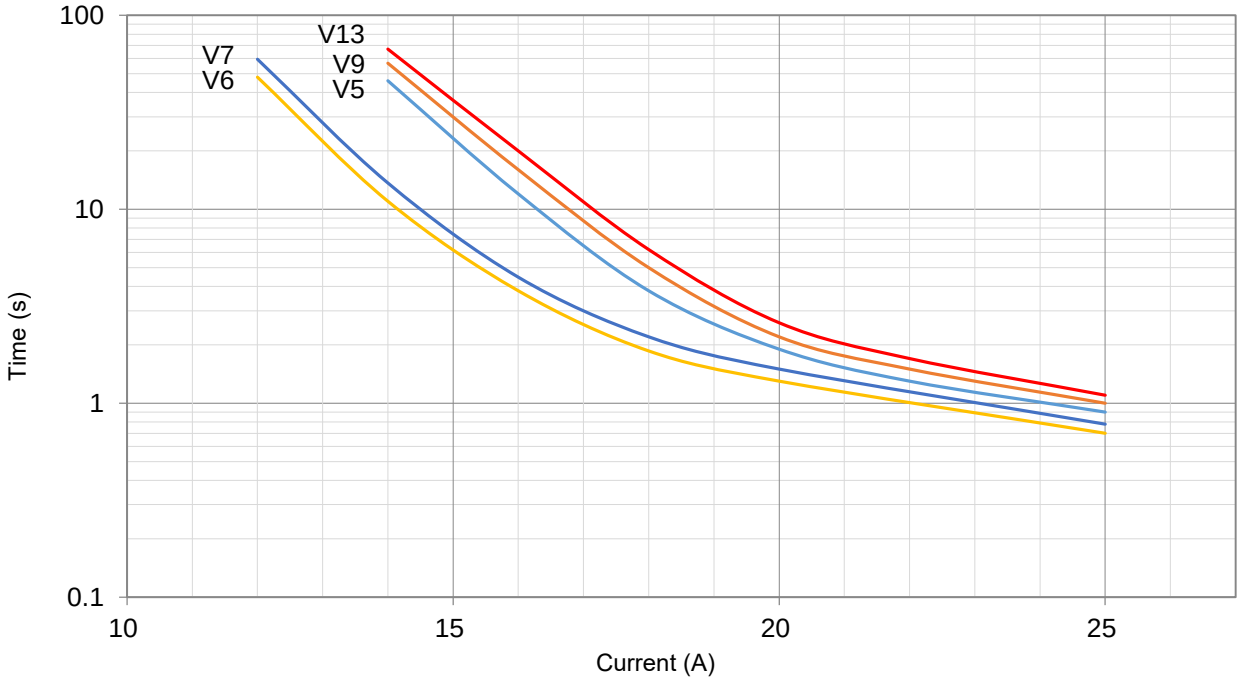

All Rights Reserved by Xiamen SET Electronics Co., Ltd. 2021-2023 V2.3

Product Temp.-Time Curve (For Reference Only)

The Temp.-Time Curve of Thermal-Link in different Temp. oil baths.

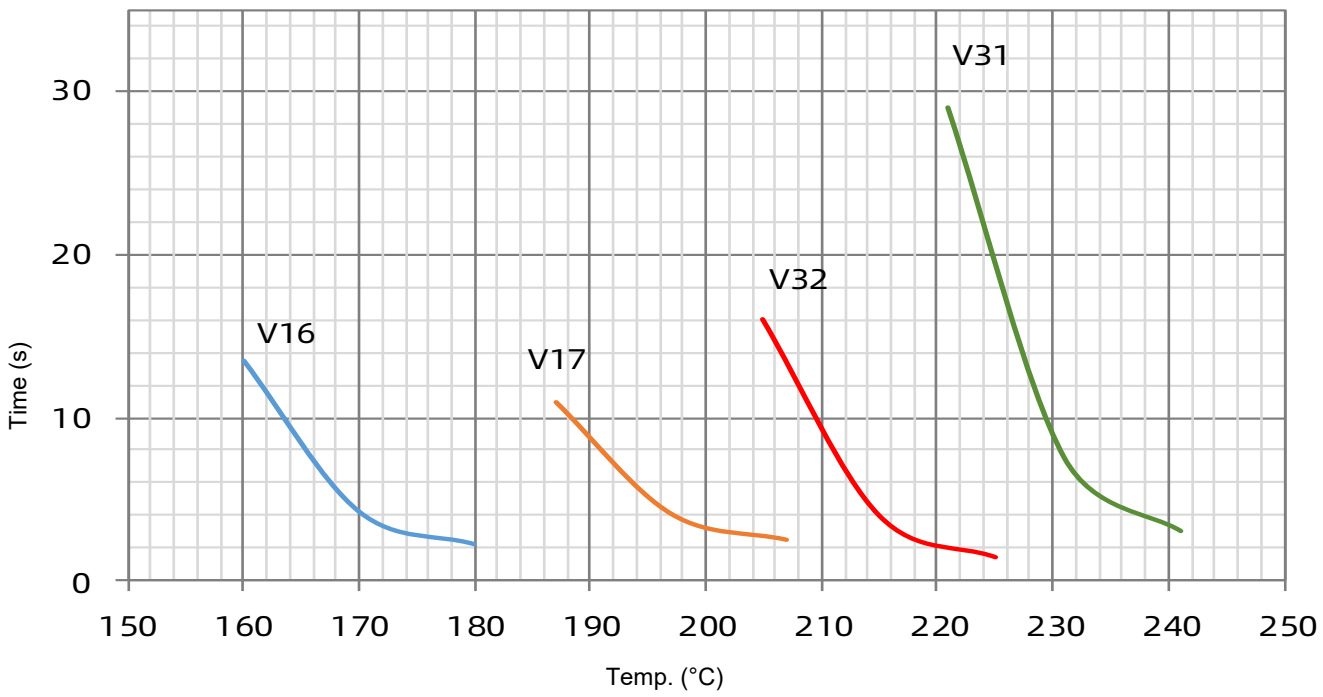

Product Current-Time Curve (For Reference Only)

The Current-Time Curve shows functioning time at multi-times rated current at room temperature 25 ± 2 °C.

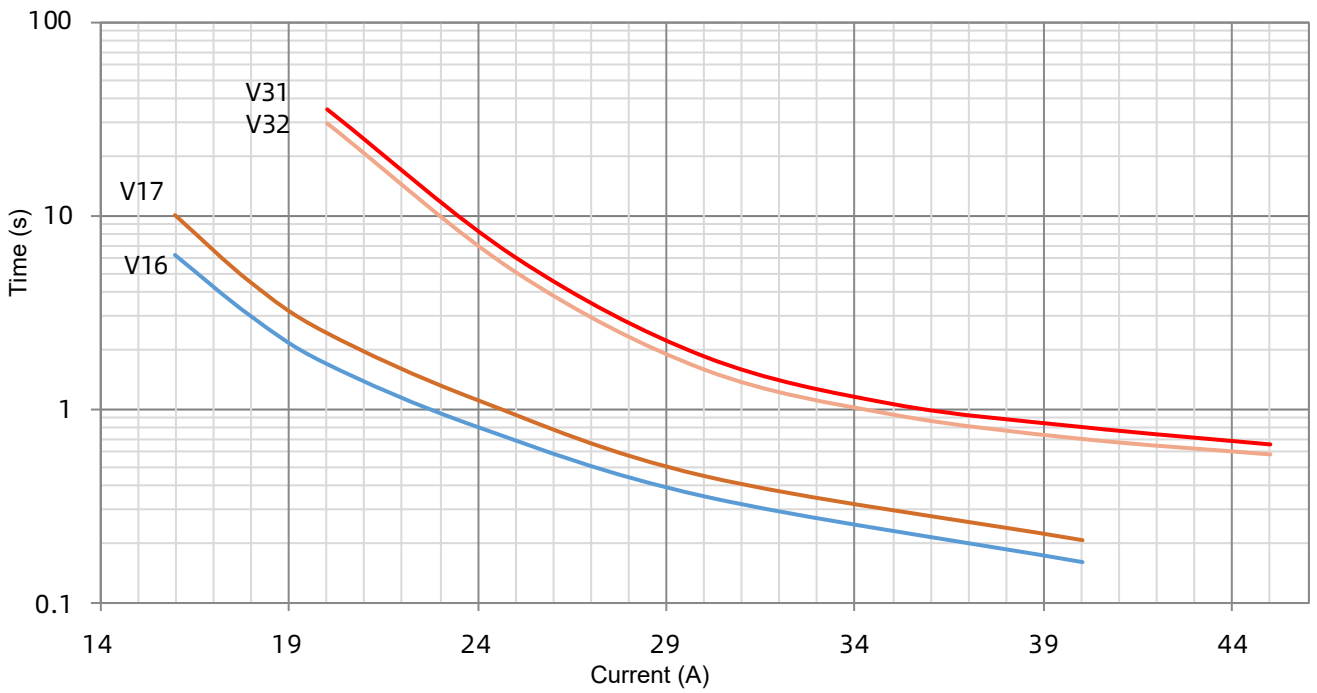

All Rights Reserved by Xiamen SET Electronics Co., Ltd. 2021-2023 V2.3

Applications

- Lamps
- Switched-Mode Power Supplies
- Home Electrical Appliances
- Transformers
- Motors
- Electric Blankets
- Electric Aroma Diffusers

Features

- High Accuracy of Functioning Temp.
- Non-Resettable
- RoHS & REACH Compliant

Customization

- Temp.
- The Length of Lead Wires
- Taping Packing Available
- Lead Wires can be Insulated
- Tinned Copper Wires or CP Wires

ATCO

Agency Approvals

Agency Mark	Standards	No.
	UL 60691	E214712
	CAN-CSA-E60691	E214712
	EN 60691	R50112716
	J60691	JET2121-32001-2021、JET2121-32001-2022 JET2121-32001-2023、JET2121-32001-2024 JET2121-32001-2025、JET2121-32001-2026 JET2121-32001-2027、JET2121-32001-2028
	K60691	SU05023-11001、SU05023-11002 SU05023-11003
	GB 9816.1	2020980205000186

Dimensions (mm)

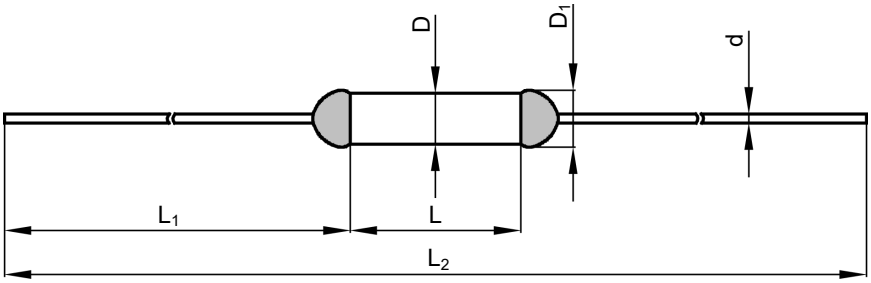

L	L_1	L_2	D	D_1	d
9.0 ± 0.5	35.0 ± 2.0	79.0 ± 3.0	2.5 ± 0.5	≤ 3.0	0.54 ± 0.05

All Rights Reserved by Xiamen SET Electronics Co., Ltd. 2021-2023 V2.3

Specifications

Model	T_f	Fusing Temp.	T_h	T_m	I_r	U_r	UL	cUL	TUV	PSE	KTL	CCC	RoHS REACH
	(°C)	(°C)	(°C)	(°C)	(A)	(V)							
H0	76	73 ± 2	53	200	2	AC 250	○	○	●	●	●	●	●
						AC 125	●	●	○	○	○	○	●
						DC 50	●	●	○	○	○	○	●
H18	86	81 ± 2	61	200	2	AC 250	○	○	●	●	●	●	●
						AC 125	●	●	○	○	○	○	●
						DC 50	●	●	○	○	○	○	●
H21	97	93 ± 2	70	200	2	AC 250	○	○	○	○	○	○	●
						AC 125	●	●	○	○	○	○	●
						DC 50	●	●	○	○	○	○	●
H1	102	98 ± 3	79	200	2	AC 250	○	○	●	●	●	●	●
						AC 125	●	●	○	○	○	○	●
						DC 50	●	●	○	○	○	○	●
H2	115	111 ± 2	91	200	2	AC 250	●	●	●	●	●	●	●
						DC 50	●	●	○	○	○	○	●
H3	125	121 ± 2	100	200	2	AC 250	●	●	●	●	●	●	●
						DC 50	●	●	○	○	○	○	●
H4	130	125 ± 2	106	200	2	AC 250	●	●	●	●	●	●	●
						DC 50	●	●	○	○	○	○	●
H8	133	130 ± 2	111	200	2	AC 250	●	●	●	●	●	●	●
						DC 50	●	●	○	○	○	○	●
H5	135	130 ± 2	111	200	2	AC 250	●	●	●	●	●	●	●
						DC 50	●	●	○	○	○	○	●
H9	136	131 ± 2	112	200	2	AC 250	●	●	●	●	●	●	●
						DC 50	●	●	○	○	○	○	●
H13	139	135 ± 2	115	200	2	AC 250	●	●	●	●	●	●	●
						DC 50	●	●	○	○	○	○	●
H6	145	140 ± 2	121	200	2	AC 250	●	●	●	●	●	●	●
						DC 50	●	●	○	○	○	○	●
H7	150	145 ± 2	126	200	2	AC 250	●	●	●	●	●	●	●
						DC 50	●	●	○	○	○	○	●
V16 / H16	160	154 ± 2	135	200	1 / 2	AC 250	○	○	●	●	○	●	●
						DC 60	○	○	●	○	○	●	●
V32 / H32	205	199 ± 3	169	250	1 / 2	AC 250	○	○	●	●	○	●	●
						AC 125	●	●	○	○	○	○	●
						DC 60	●	●	●	○	○	●	●
V31 / H31	221	218 ± 2	188	250	1 / 2	AC 250	●	●	●	●	○	●	●
						AC 125	●	●	○	○	○	○	●
						DC 60	●	●	●	○	○	●	●

Note:

"● "Means certificated.

"○ "Means non-certificated.

All Rights Reserved by Xiamen SET Electronics Co., Ltd. 2021-2023 V2.3

Packaging Information

Bulk

Item	PE Bag	PE Bag	Carton
Dimensions (mm)	135 × 85	190 × 180	440 × 300 × 260
Quantity (PCS)	100	1000	50000
Gross Weight (kg)			16.0 ± 10%

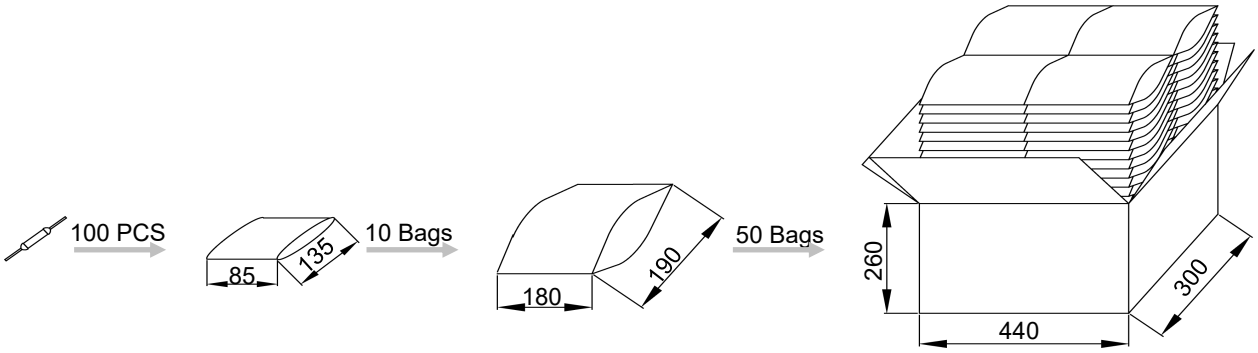

Taping

Item	Scroll	Box	Carton
Dimensions (mm)	Φ 250 × 94	258 × 258 × 98	480 × 300 × 260
Quantity (PCS)	2500	2500	10000
Gross Weight (kg)			5.0 ± 10%

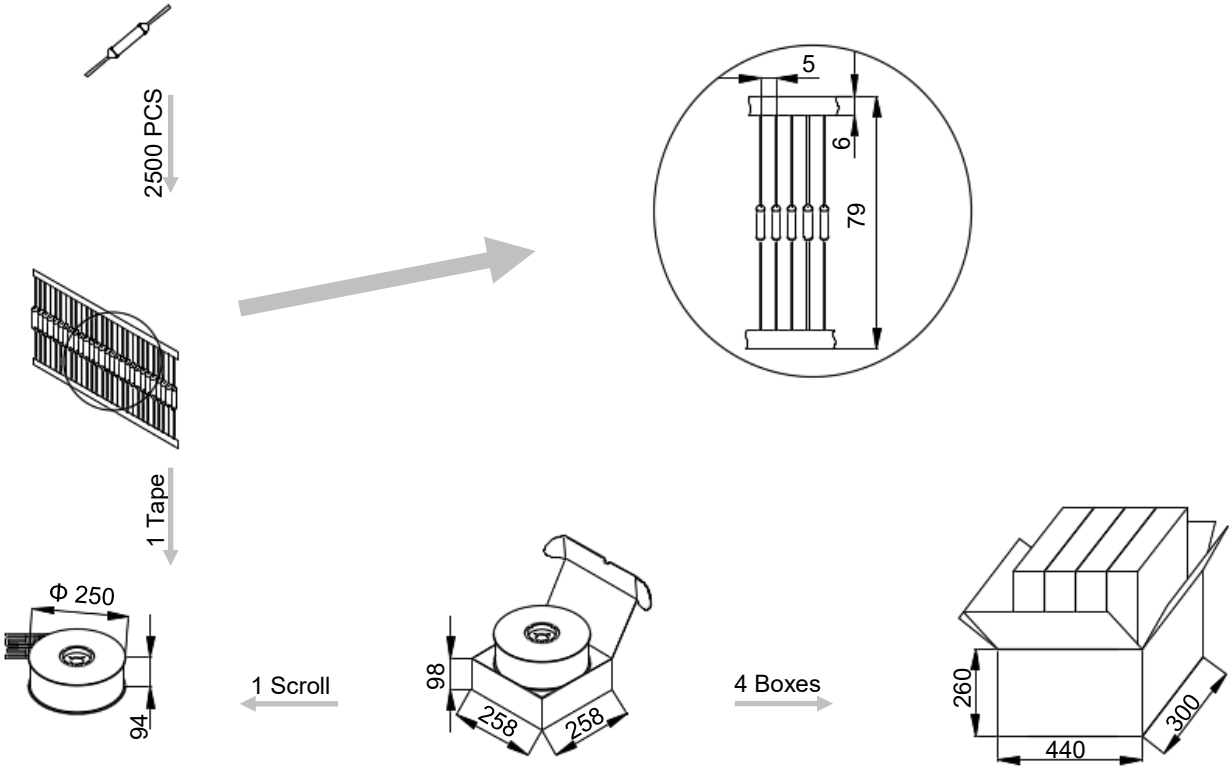

All Rights Reserved by Xiamen SET Electronics Co., Ltd. 2021-2023 V2.3

Product Temp.-Time Curve (For Reference Only)

The Temp.-Time Curve of Thermal-Link in different Temp. oil baths.

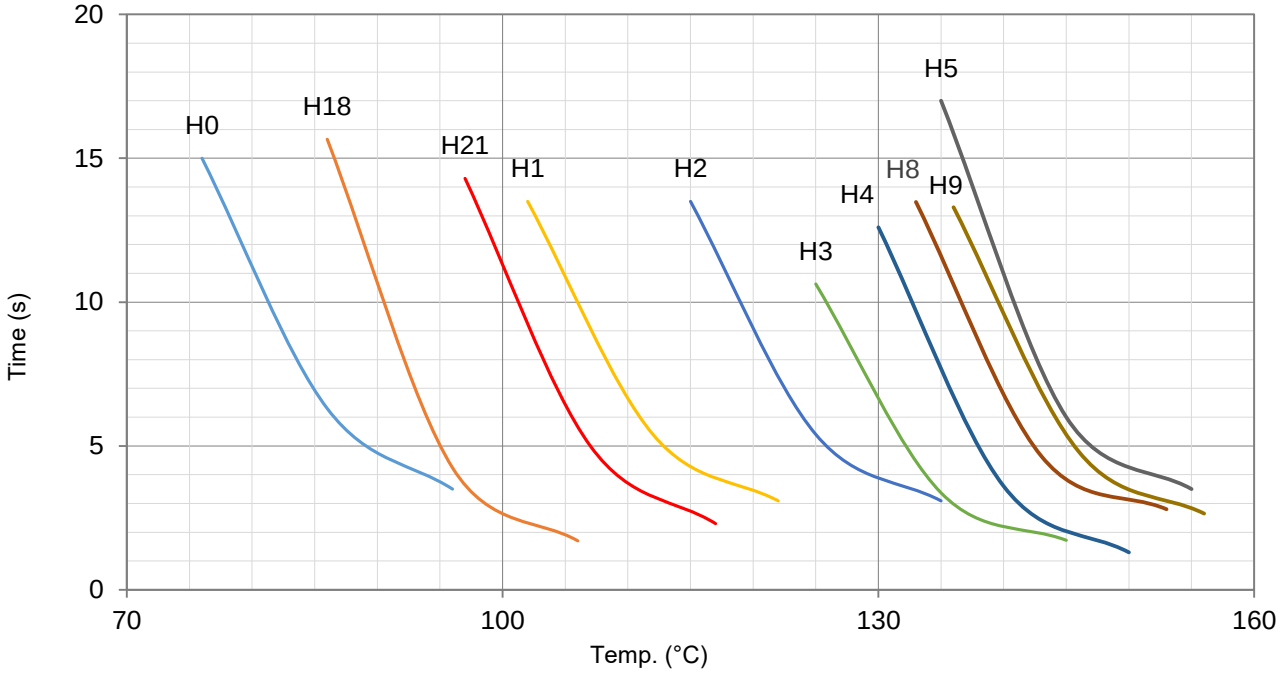

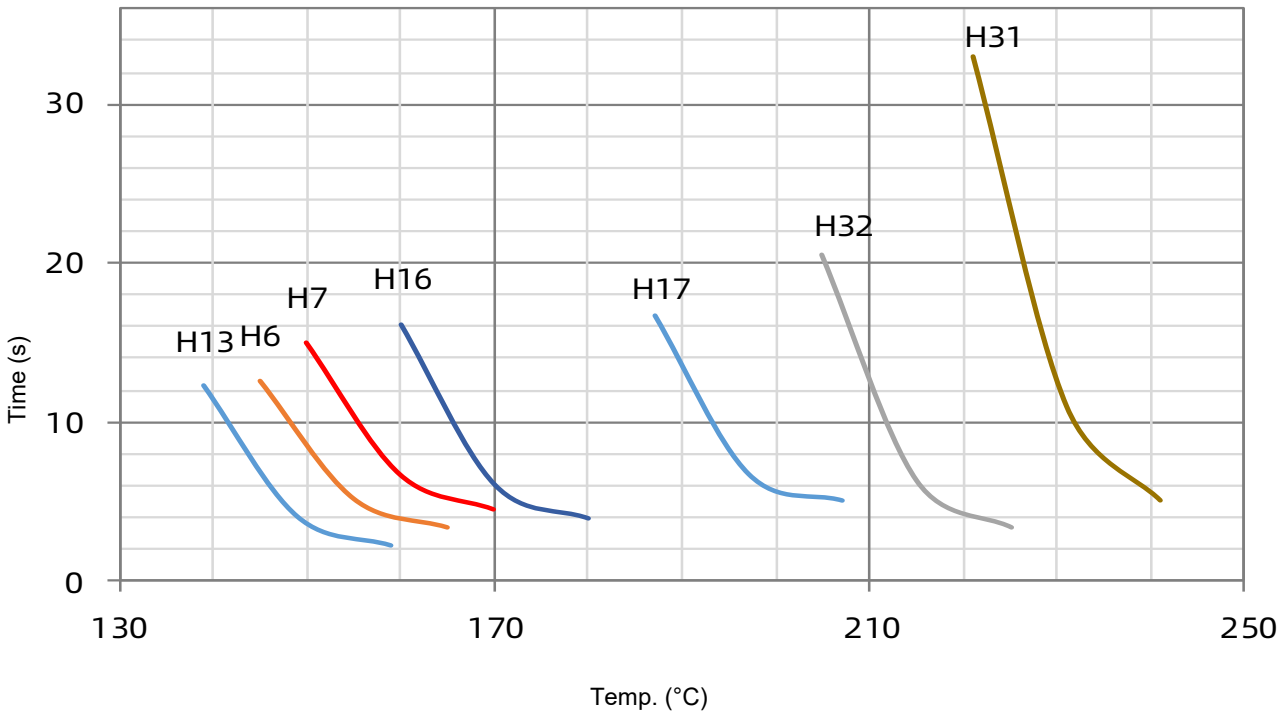

All Rights Reserved by Xiamen SET Electronics Co., Ltd. 2021-2023 V2.3

Product Current-Time Curve (For Reference Only)

The Current-Time Curve shows functioning time at multi-times rated current at room temperature 25 ± 2 °C.

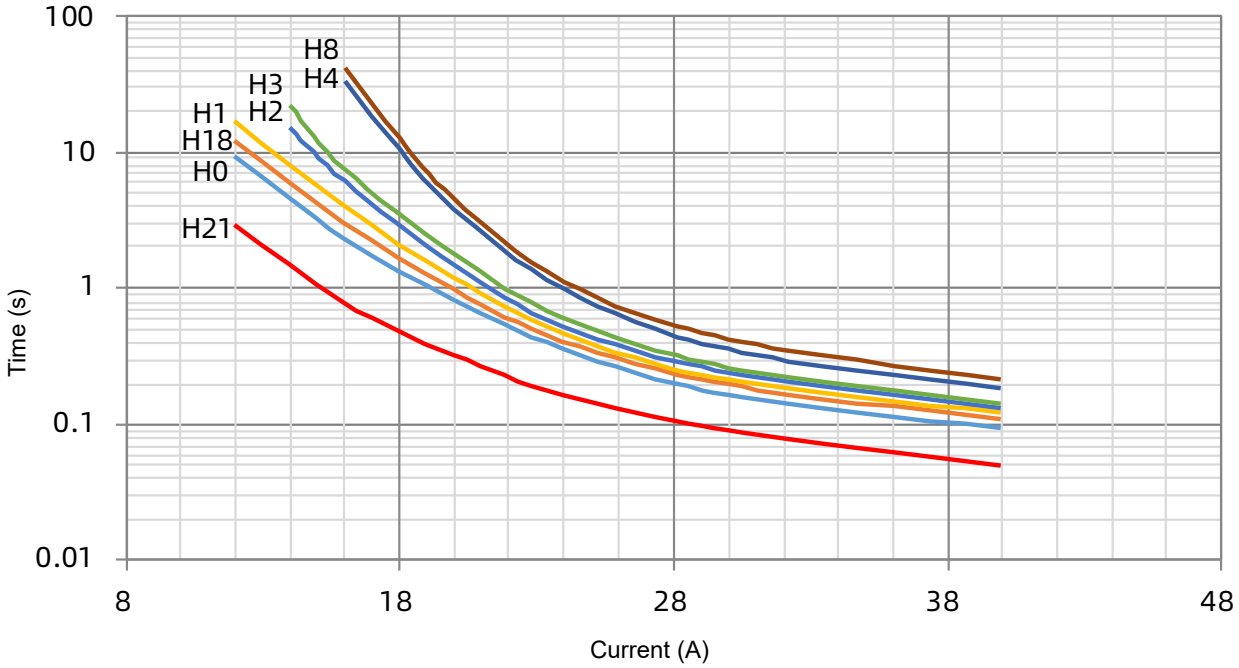

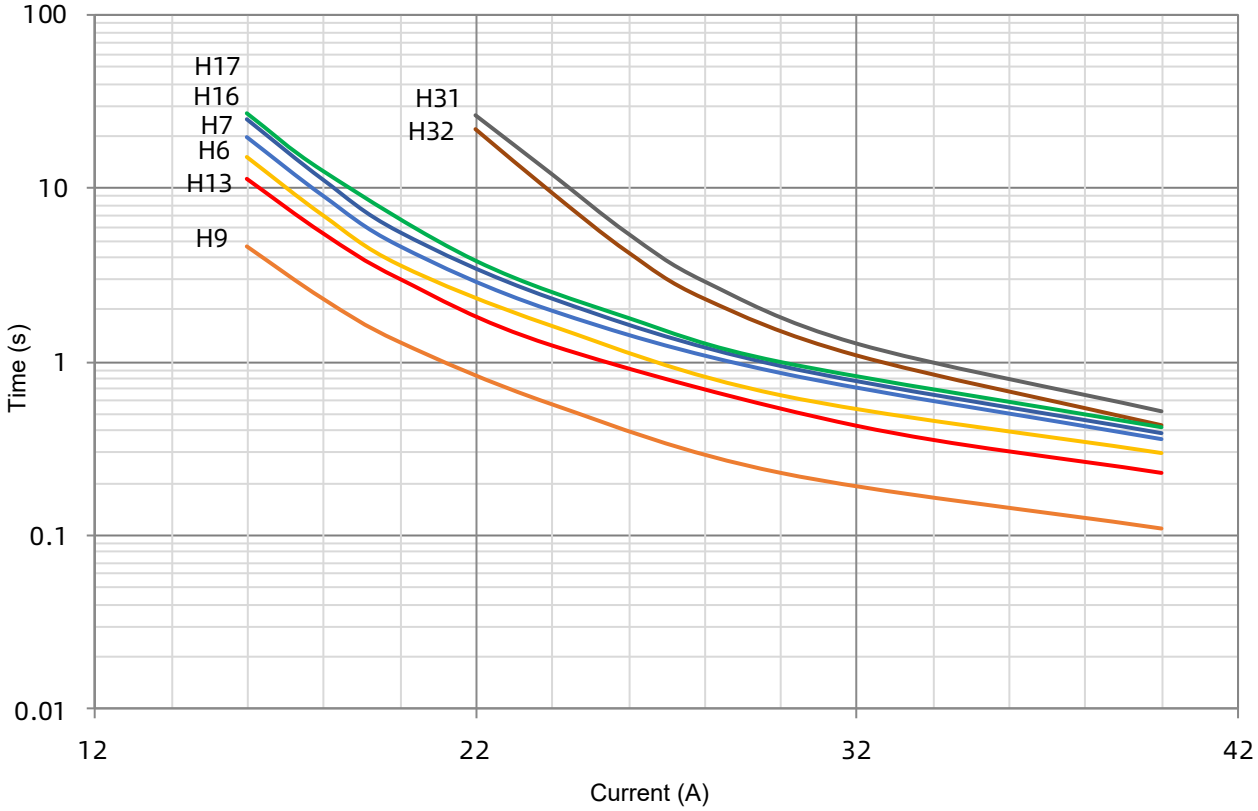

All Rights Reserved by Xiamen SET Electronics Co., Ltd. 2021-2023 V2.3

Applications

- Lamps
- Switched-Mode Power Supplies
- Home Electrical Appliances
- Transformers
- Motors
- Electric Blankets
- Electric Aroma Diffusers

Features

- High Accuracy of Functioning Temp.
- Non-Resettable
- RoHS & REACH Compliant

Customization

- Temp.
- The Length of Lead Wires
- Taping Packing Available
- Lead Wires can be Insulated
- Tinned Copper Wires or CP Wires

Agency Approvals

Agency Mark	Standards	No.
	UL 60691	E214712
	CAN-CSA-E60691	E214712
	EN 60691	R50259434
	J60691	JET2121-32001-2021、JET2121-32001-2022 JET2121-32001-2023、JET2121-32001-2024 JET2121-32001-2025、JET2121-32001-2026 JET2121-32001-2027、JET2121-32001-2028
	K60691	SU05023-11001、SU05023-11002 SU05023-11003
	GB 9816.1	2020980205000186

Dimensions (mm)

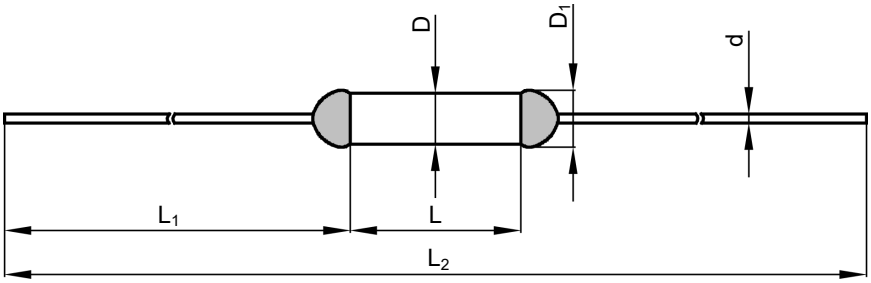

L	L_1	L_2	D	D_1	d
10.0 ± 0.5	35.0 ± 2.0	80.0 ± 3.0	3.0 ± 0.5	≤ 3.5	0.54 ± 0.05

All Rights Reserved by Xiamen SET Electronics Co., Ltd. 2021-2023 V2.3

Specifications

Model	T_f	Fusing Temp.	T_h	T_m	I_r	U_r	UL	cUL	TUV	PSE	KC	CCC	RoHS REACH
	(°C)	(°C)	(°C)	(°C)	(A)	(V)							
B0	76	73 ± 2	53	200	3	AC 250	○	○	●	●	●	●	●
						AC 125	●	●	○	○	○	○	●
						DC 50	●	●	○	○	○	○	●
B18	86	81 ± 2	61	200	3	AC 250	○	○	●	●	●	●	●
						AC 125	●	●	○	○	○	○	●
						DC 50	●	●	○	○	○	○	●
B21	97	93 ± 2	70	200	3	AC 250	○	○	○	○	○	○	●
						AC 125	●	●	○	○	○	○	●
						DC 50	●	●	○	○	○	○	●
B1	102	98 ± 3	79	200	3	AC 250	○	○	●	●	●	●	●
						AC 125	●	●	○	○	○	○	●
						DC 50	●	●	○	○	○	○	●
B2	115	111 ± 2	91	200	3	AC 250	●	●	●	●	●	●	●
						DC 50	●	●	○	○	○	○	●
B3	125	121 ± 2	100	200	3	AC 250	●	●	●	●	●	●	●
						DC 50	●	●	○	○	○	○	●
B4	130	125 ± 2	106	200	3	AC 250	●	●	●	●	●	●	●
						DC 50	●	●	○	○	○	○	●
B8	133	130 ± 2	111	200	3	AC 250	●	●	●	●	●	●	●
						DC 50	●	●	○	○	○	○	●
B5	135	130 ± 2	111	200	3	AC 250	●	●	●	●	●	●	●
						DC 50	●	●	○	○	○	○	●
B9	136	131 ± 2	112	200	3	AC 250	●	●	●	●	●	●	●
						DC 50	●	●	○	○	○	○	●
B13	139	135 ± 2	115	200	3	AC 250	●	●	●	●	●	●	●
						DC 50	●	●	○	○	○	○	●
B6	145	140 ± 2	121	200	3	AC 250	●	●	●	●	●	●	●
						DC 50	●	●	○	○	○	○	●
B7	150	145 ± 2	126	200	3	AC 250	●	●	●	●	●	●	●
						DC 50	●	●	○	○	○	○	●
B16	160	154 ± 2	135	200	3	AC 250	○	○	●	●	○	●	●
						DC 60	○	○	●	○	○	○	●
B17	187	182 ± 3	162	250	3	AC 250	●	●	●	●	●	●	●
						DC 60	●	●	●	○	○	○	●
B32	205	199 ± 3	169	250	3	AC 250	○	○	●	●	○	●	●
						AC 125	●	●	○	○	○	○	●
						DC 60	●	●	●	○	○	○	●
B31	221	218 ± 2	188	250	3	AC 250	●	●	●	●	○	●	●
						AC 125	●	●	○	○	○	○	●
						DC 60	●	●	●	○	○	○	●

Note:

"● "Means certificated.

"○ "Means non-certificated.

All Rights Reserved by Xiamen SET Electronics Co., Ltd. 2021-2023 V2.3

Packaging Information

Bulk

Item	PE Bag	PE Bag	Carton
Dimensions (mm)	135 × 85	190 × 180	440 × 300 × 260
Quantity (PCS)	100	1000	40000
Gross Weight (kg)			15.0 ± 10%

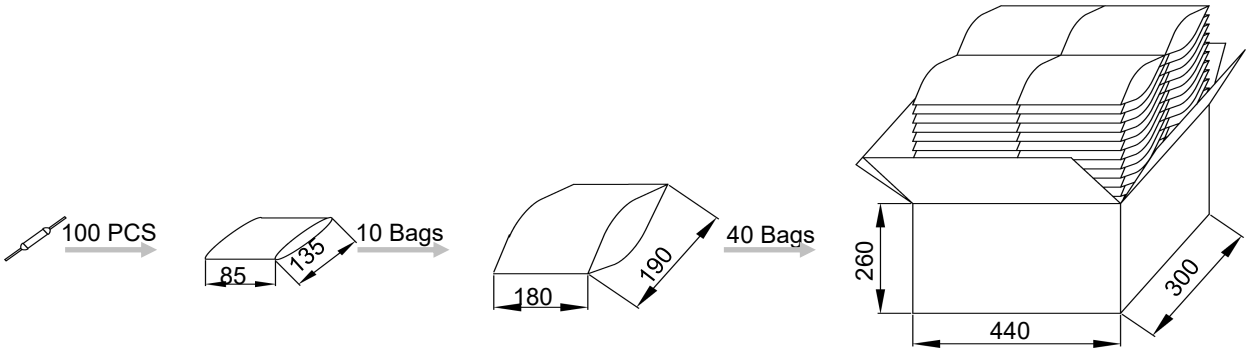

Taping

Item	Scroll	Box	Carton
Dimensions (mm)	Φ 250 × 94	258 × 258 × 98	480 × 300 × 260
Quantity (PCS)	2500	2500	10000
Gross Weight (kg)			5.6 ± 10%

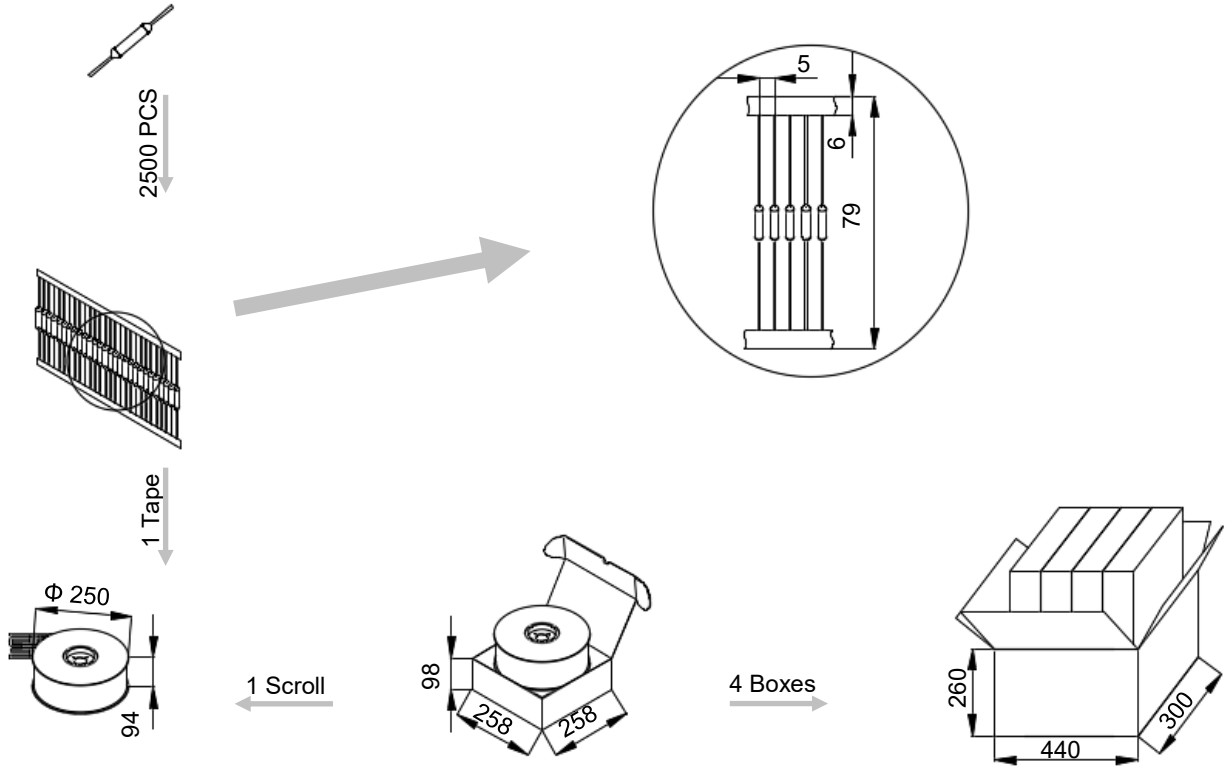

All Rights Reserved by Xiamen SET Electronics Co., Ltd. 2021-2023 V2.3

Product Temp.-Time Curve (For Reference Only)

The Temp.-Time Curve of Thermal-Link in different Temp. oil baths.

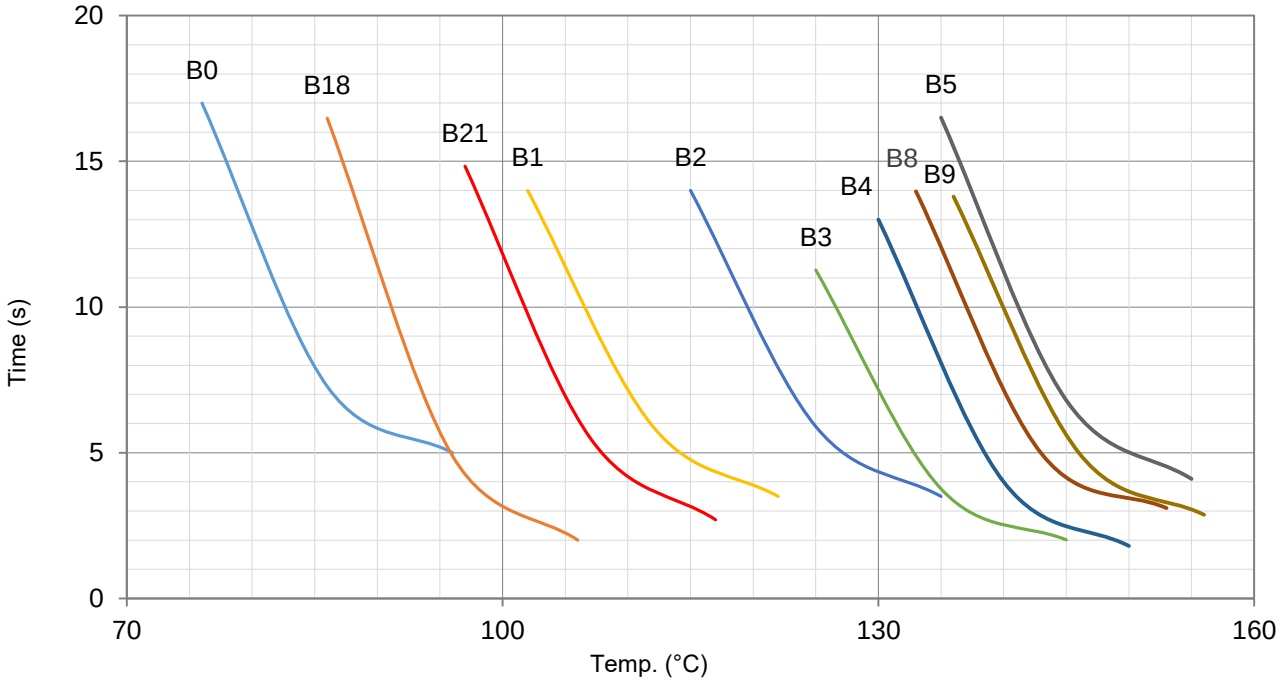

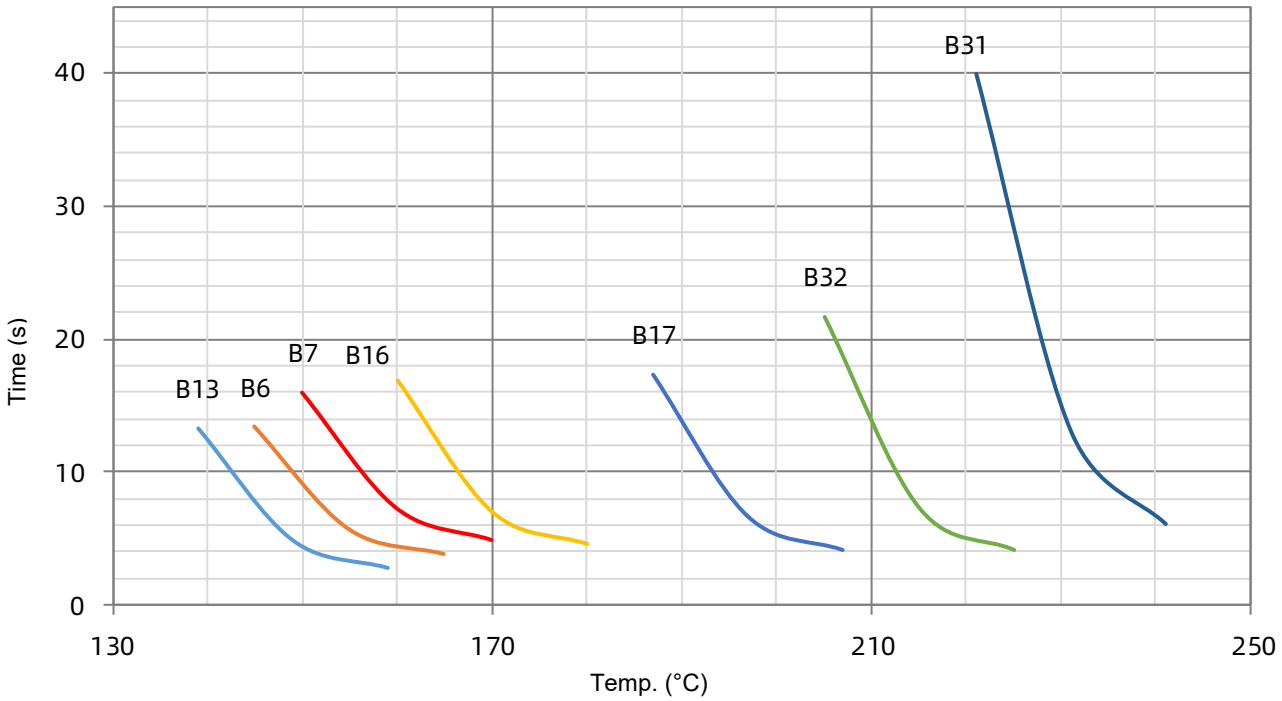

All Rights Reserved by Xiamen SET Electronics Co., Ltd. 2021-2023 V2.3

Product Current-Time Curve (For Reference Only)

The Current-Time Curve shows functioning time at multi-times rated current at room temperature 25 ± 2 °C.

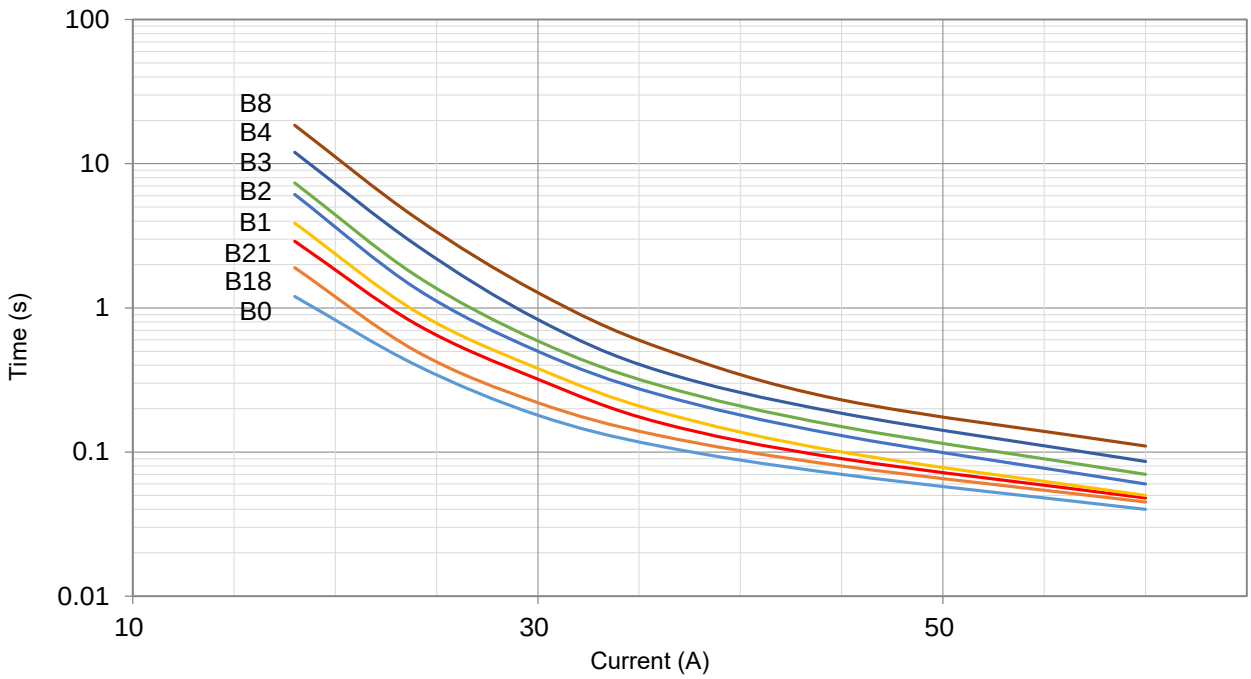

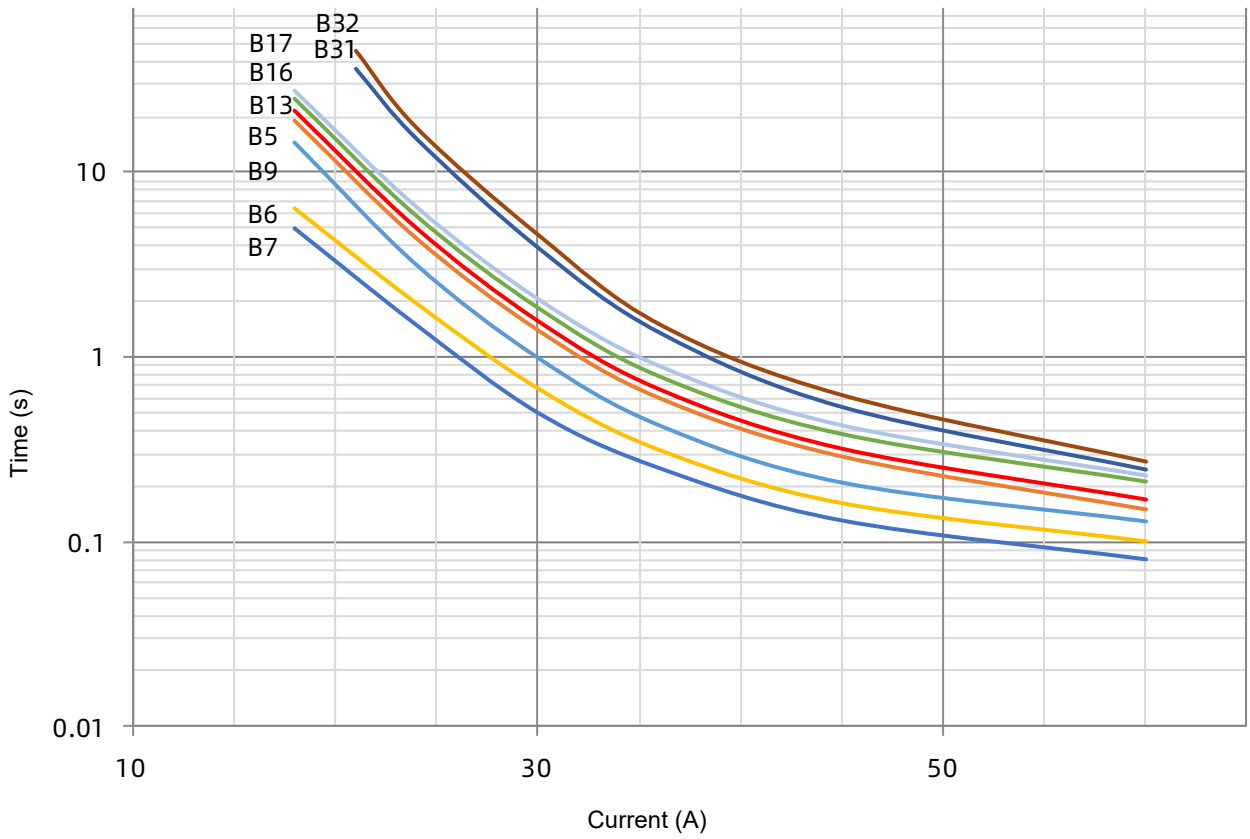

All Rights Reserved by Xiamen SET Electronics Co., Ltd. 2021-2023 V2.3

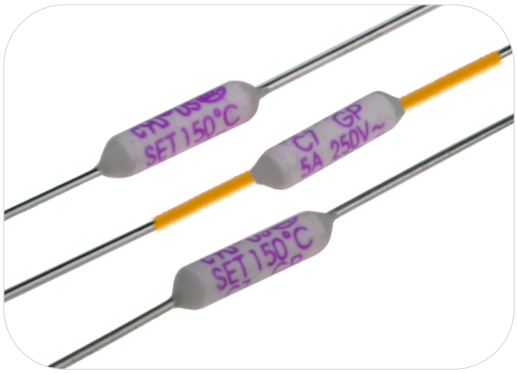

Applications

- Lamps
- Switched-Mode Power Supplies
- Home Electrical Appliances
- Transformers
- Motors
- Capacitors

Features

- High Accuracy of Functioning Temp.
- Non-Resettable
- RoHS & REACH Compliant

Customization

- Temp.
- The Length of Lead Wires
- Taping Packing Available
- Lead Wires can be Insulated
- Tinned Copper Wires or CP Wires

Agency Approvals

Agency Mark	Standards	No.
	UL 60691	E214712
	CAN-CSA-E60691	E214712
	EN 60691	R50112716
	J60691	JET2121-32001-2021、JET2121-32001-2022 JET2121-32001-2023、JET2121-32001-2024 JET2121-32001-2025、JET2121-32001-2026 JET2121-32001-2027、JET2121-32001-2028
	K60691	SU05023-11001、SU05023-11002 SU05023-11003
	GB 9816.1	2020980205000187

Dimensions (mm)

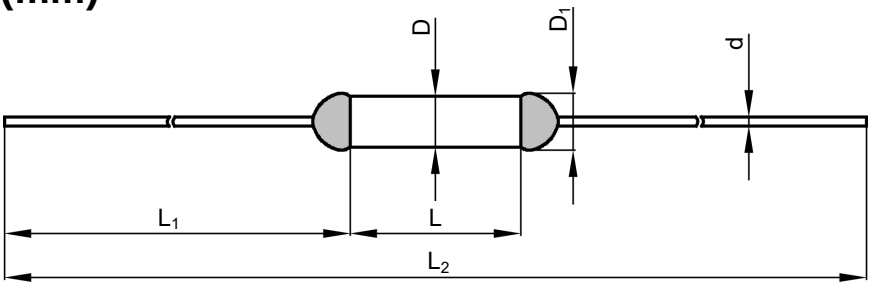

L	L_1	L_2	D	D_1	d
11.5 ± 0.5	34.0 ± 2.0	79.5 ± 3.0	3.3 ± 0.5	≤ 3.8	0.80 ± 0.05

All Rights Reserved by Xiamen SET Electronics Co., Ltd. 2021-2023 V2.3

Specifications

Model	T_f	Fusing Temp.	T_h	T_m	I_r	U_r	I_n 8 / 20 μs (15 Times)	I_{max} 8 / 20 μs (1 Time)	UL	cUL	TUV	PSE	KC	CCC	RoHS REACH
	(°C)	(°C)	(°C)	(°C)	(A)	(V)	(kA)	(kA)	UL	cUL	TUV	PSE	KC	CCC	
C0	76	73 ± 2	53	200	5	AC 250	2	4	○	○	●	●	●	●	●
C18	86	81 ± 2	61	200	5	AC 250	2	4	○	○	●	●	●	●	●
						AC 125	2	4	●	●	○	○	○	○	●
						DC 50	2	4	●	●	○	○	○	○	●
			45		6	DC 60	2	4	●	●	●	○	○	○	●
C21	97	93 ± 2	70	200	5	AC 250	2	4	○	○	○	○	○	○	●
						AC 125	2	4	●	●	○	○	○	○	●
						DC 50	2	4	●	●	○	○	○	○	●
C1	102	98 ± 3	77	200	5	AC 250	3	6	○	○	●	●	●	●	●
						AC 125	3	6	●	●	○	○	○	○	●
						DC 50	3	6	●	●	○	○	○	○	●
C2	115	111 ± 2	89	200	5	AC 250	3	6	●	●	●	●	●	●	●
					7	DC 50	3	6	●	●	○	○	○	○	●
			75		8	DC 60	3	6	●	●	●	○	○	○	●
C3	125	121 ± 2	98	200	5	AC 250	3	6	●	●	●	●	●	●	●
					7	DC 50	3	6	●	●	○	○	○	○	●
C4	130	125 ± 2	103	200	5	AC 250	3	6	●	●	●	●	●	●	●
					7	DC 50	3	6	●	●	○	○	○	○	●
C8	133	130 ± 2	108	200	5	AC 250	3	6	●	●	●	●	●	●	●
					7	DC 50	3	6	●	●	○	○	○	○	●
C5	135	130 ± 2	108	200	5	AC 250	3	6	●	●	●	●	●	●	●
					7	DC 50	3	6	●	●	○	○	○	○	●
C9	136	131 ± 2	111	200	5	AC 250	3	6	●	●	●	●	●	●	●
					7	DC 50	3	6	●	●	○	○	○	○	●
C13	139	135 ± 2	112	200	5	AC 250	3	6	●	●	●	●	●	●	●
					7	DC 50	3	6	●	●	○	○	○	○	●
			85		8.5	DC 60	3	6	●	●	●	○	○	○	●
C6	145	140 ± 2	118	200	5	AC 250	3	6	●	●	●	●	●	●	●
					7	DC 50	3	6	●	●	○	○	○	○	●
			95		10	DC 60	3	6	●	●	●	○	○	○	●
C7	150	145 ± 2	123	200	5	AC 250	3	6	●	●	●	●	●	●	●
					7	DC 50	3	6	●	●	○	○	○	○	●
C16	160	154 ± 2	133	200	5	AC 250	3	6	○	○	●	●	○	●	●
						DC 60	3	6	○	○	●	○	○	●	●
C17	187	182 ± 3	162	250	5	AC 250	3.5	7	●	●	●	●	●	●	●
						DC 60	3.5	7	●	●	●	○	○	○	●
C32	205	199 ± 3	167	250	5	AC 250	3.5	7	○	○	●	●	○	●	●
						AC 125	3.5	7	●	●	○	○	○	○	●
						DC 60	3.5	7	●	●	●	○	○	●	●
C31	221	218 ± 2	186	250	5	AC 250	3.5	7	●	●	●	●	○	●	●
						AC 125	3.5	7	●	●	○	○	○	○	●
						DC 60	3.5	7	●	●	●	○	○	●	●

Note:

"● "Means certificated.

"○ "Means non-certificated.

All Rights Reserved by Xiamen SET Electronics Co., Ltd. 2021-2023 V2.3

Packaging Information

Bulk

Item	PE Bag	PE Bag	Carton
Dimensions (mm)	135 × 85	190 × 180	440 × 300 × 260
Quantity (PCS)	100	1000	25000
Gross Weight (kg)			16.0± 10%

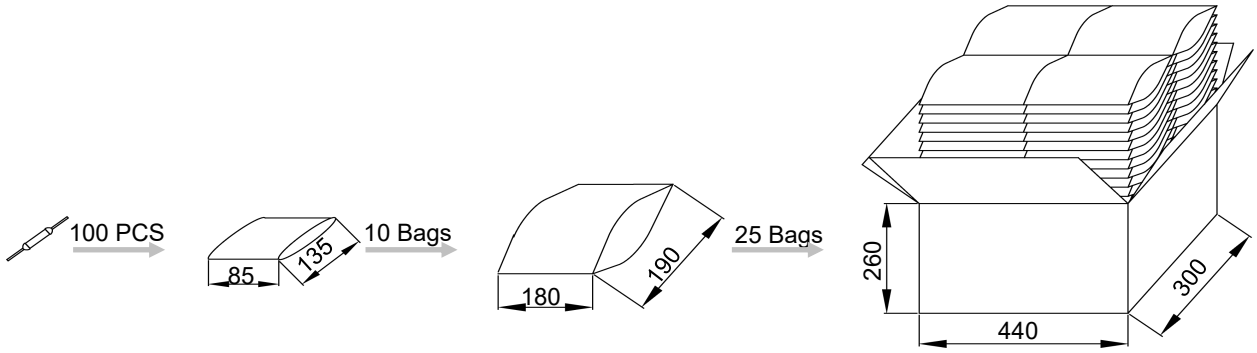

Taping

Item	Scroll	Box	Carton
Dimensions (mm)	Φ 250 × 94	258 × 258 × 98	480 × 300 × 260
Quantity (PCS)	2500	2500	10000
Gross Weight (kg)			8.0 ± 10%

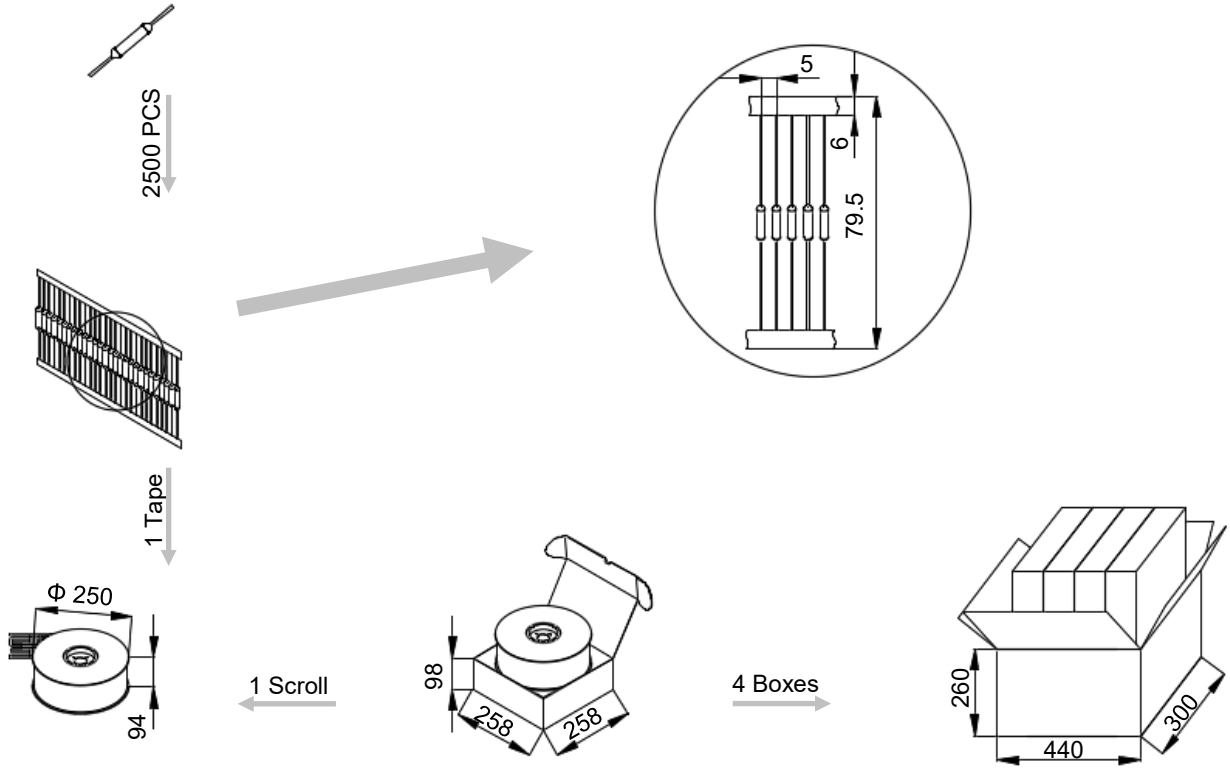

All Rights Reserved by Xiamen SET Electronics Co., Ltd. 2021-2023 V2.3

Product Temp.-Time Curve (For Reference Only)

The Temp.-Time Curve of Thermal-Link in different Temp. oil baths.

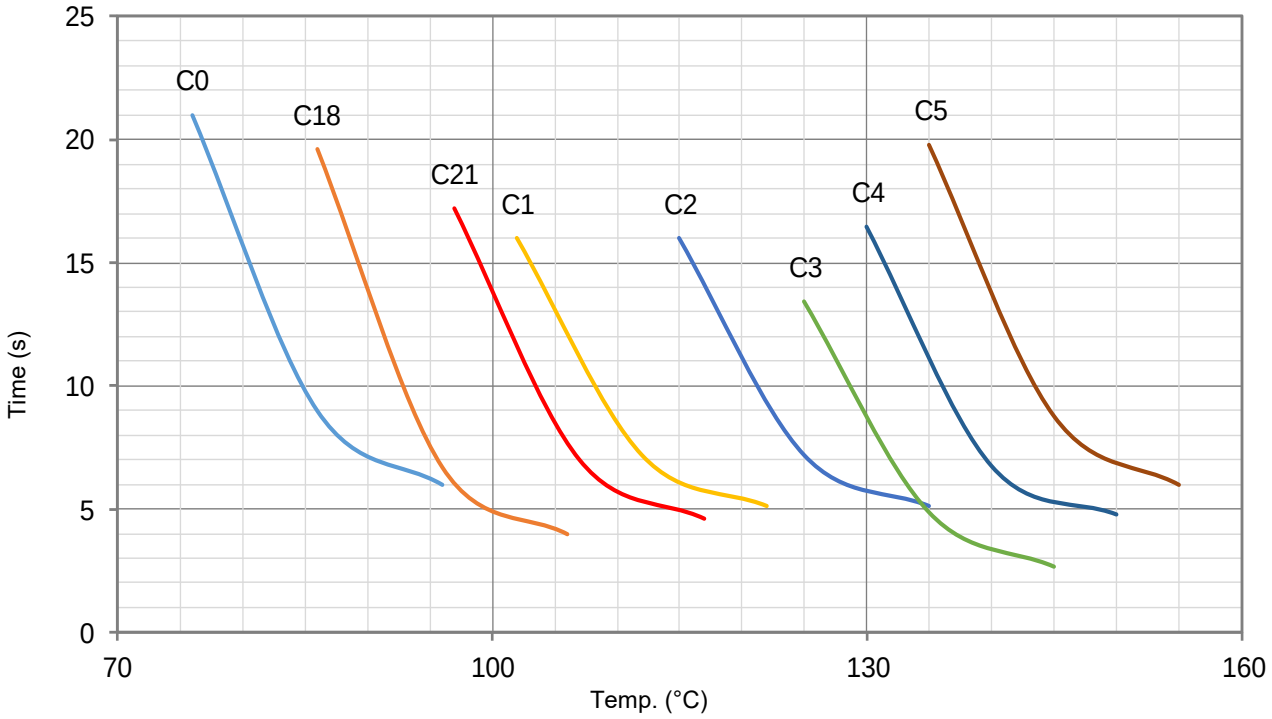

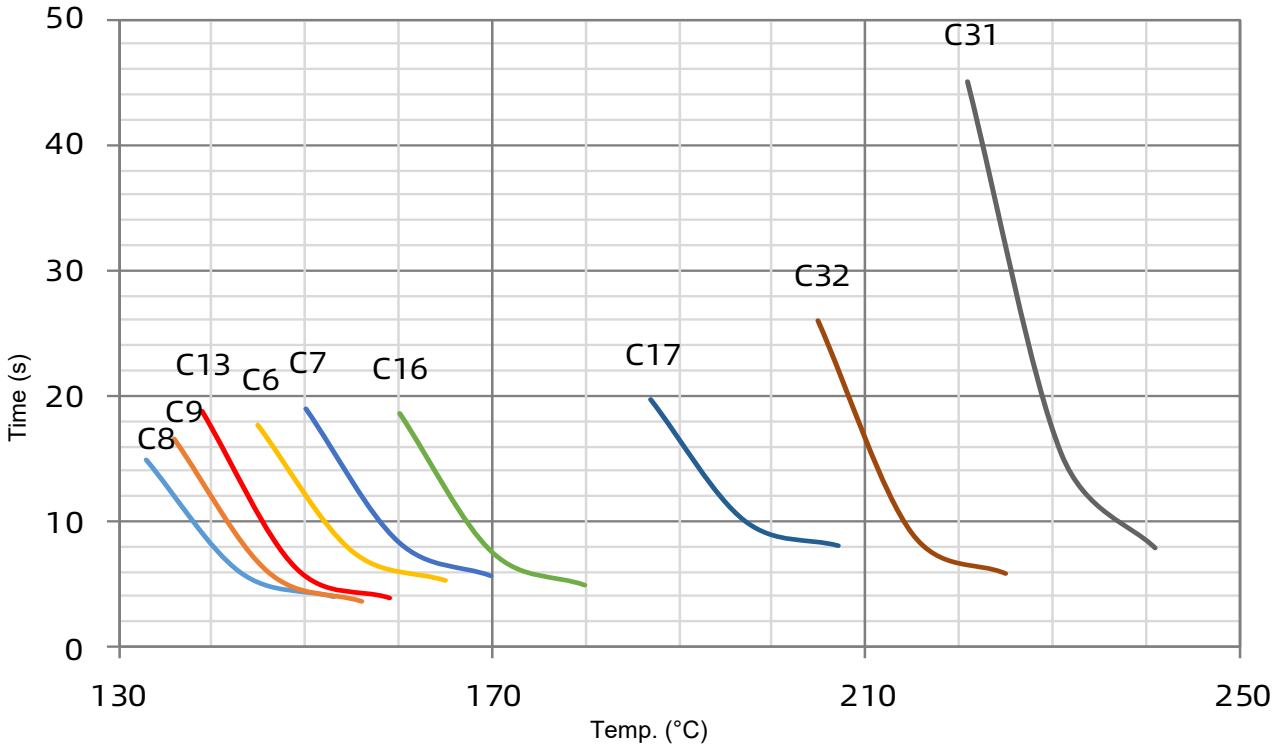

All Rights Reserved by Xiamen SET Electronics Co., Ltd. 2021-2023 V2.3

Product Current-Time Curve (For Reference Only)

The Current-Time Curve shows functioning time at multi-times rated current at room temperature 25 ± 2 °C.

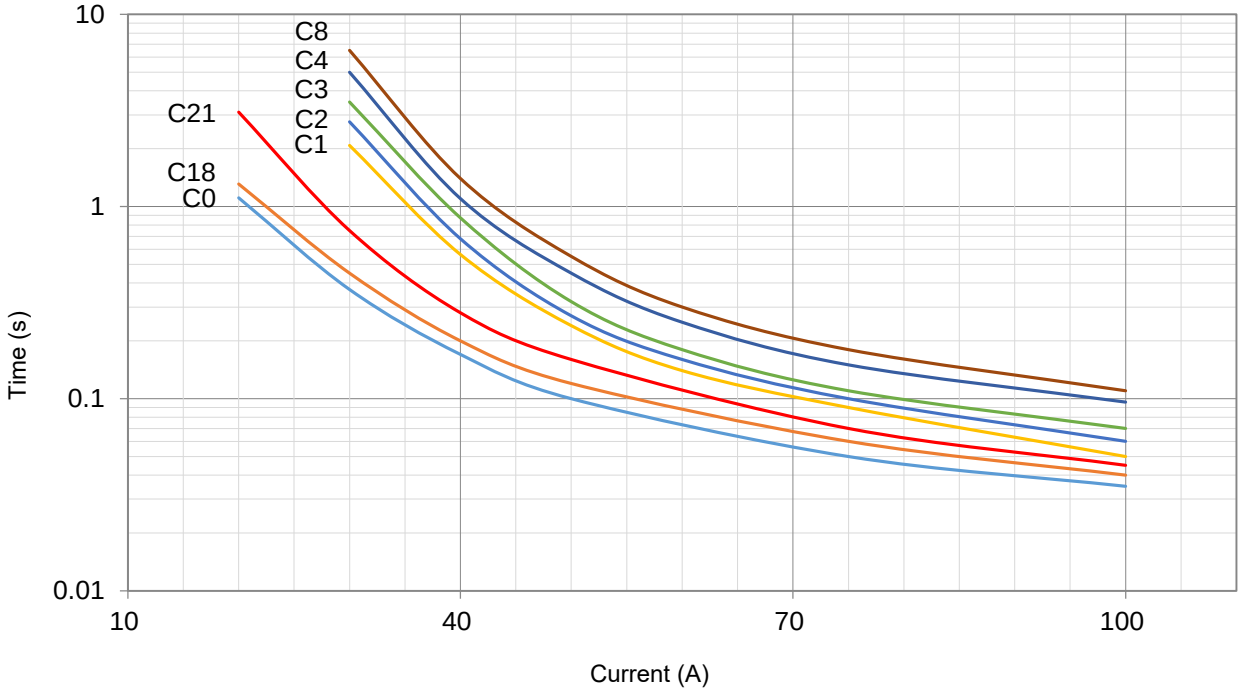

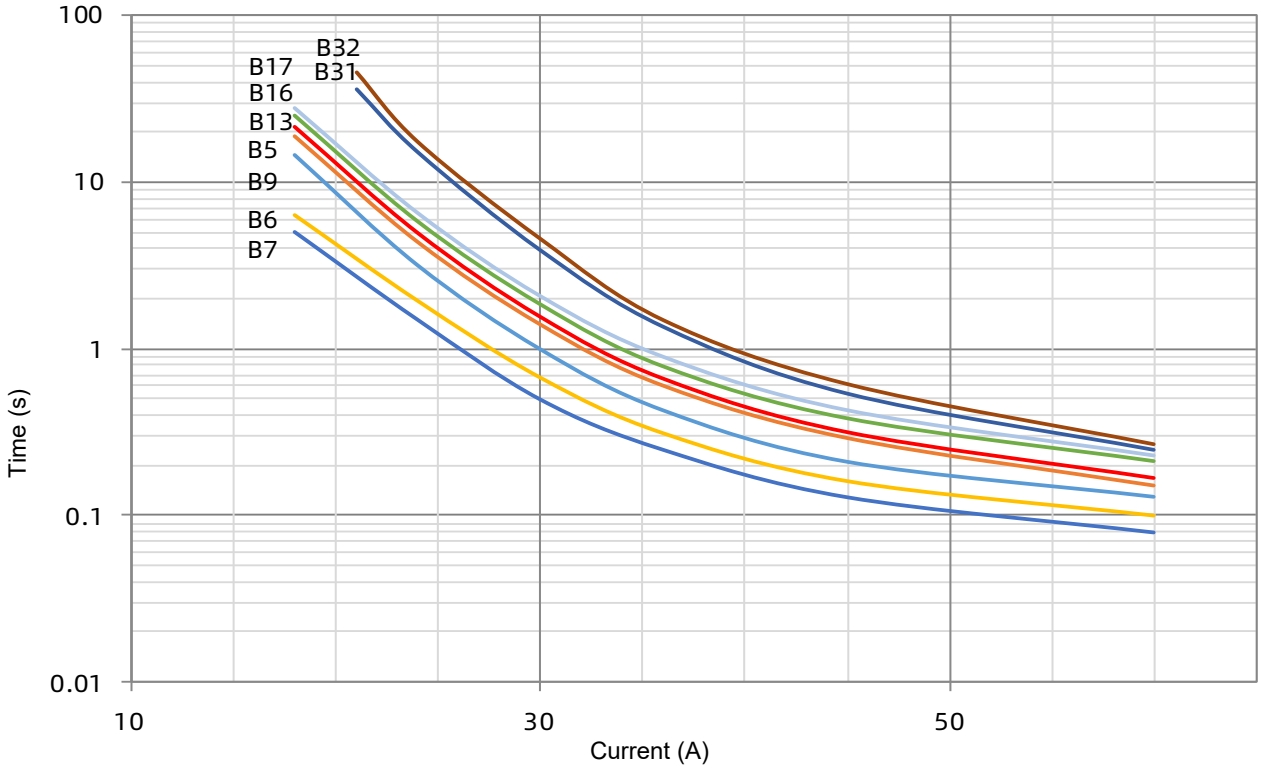

All Rights Reserved by Xiamen SET Electronics Co., Ltd. 2021-2023 V2.3

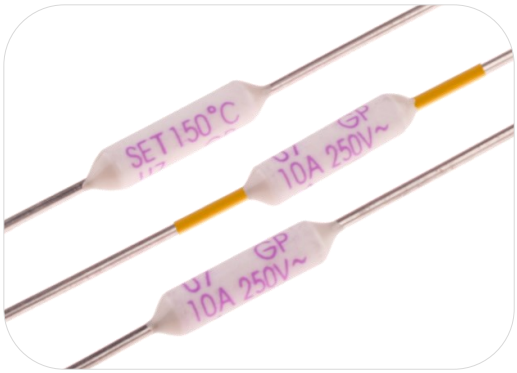

Applications

- Lamps
- Switched-Mode Power Supplies
- Home Electrical Appliances
- Transformers
- Motors
- Capacitors
- Power Strips

Features

- High Accuracy of Functioning Temp.
- Non-Resettable
- RoHS & REACH Compliant

Customization

- Temp.
- The Length of Lead Wires
- Taping Packing Available
- Lead Wires can be Insulated

Agency Approvals

Agency Mark	Standards	No.
	UL 60691	E214712
	CAN-CSA-E60691	E214712
	EN 60691	R50207621
	GB 9816.1	2020980205000193

Dimensions (mm)

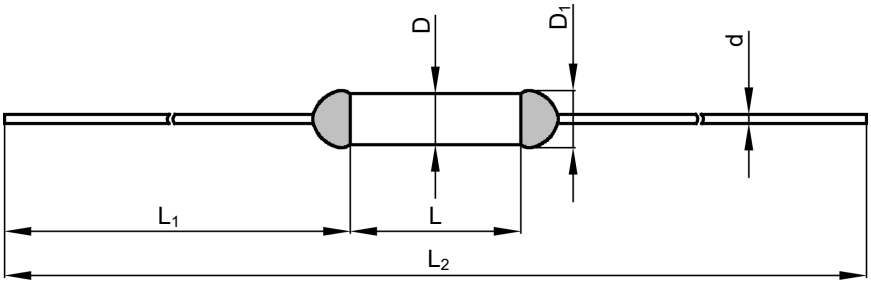

L	L_1	L_2	D	D_1	d
14.0 ± 0.5	33.0 ± 2.0	80.0 ± 3.0	4.0 ± 0.5	≤ 4.5	1.05 ± 0.05

All Rights Reserved by Xiamen SET Electronics Co., Ltd. 2021-2023 V2.3

Specifications

Model	T_f	Fusing Temp.	T_h	T_m	I_r	U_r	I_n 8 / 20 μs (15 Times)	I_{max} 8 / 20 μs (1 Time)	UL	cUL	TUV	CCC	RoHS REACH
	(°C)	(°C)	(°C)	(°C)	(A)	(V)	(kA)	(kA)					
U0	76	73 ± 2	43	200	10	AC 250	3	6	○	○	●	●	●
						DC 60	3	6	○	○	●	●	●
U18	86	81 ± 2	51	200	10	AC 250	3	6	○	○	●	●	●
						DC 60	3	6	○	○	●	●	●
U1	102	98 ± 2	72	200	1	AC 250	4	8	○	○	●	●	●
						DC 60	4	8	○	○	●	●	●
U2	115	111 ± 3	85	200	10	AC 250	4	8	●	●	●	●	●
						DC 60	4	8	○	○	●	●	●
U3	125	121 ± 2	95	200	10	AC 250	4	8	○	○	●	●	●
						DC 60	4	8	○	○	●	●	●
U4	130	125 ± 2	100	200	10	AC 250	4	8	○	○	●	●	●
						DC 60	4	8	○	○	●	●	●
U5	135	130 ± 2	105	200	10	AC 250	4	8	●	●	●	●	●
						DC 60	4	8	○	○	●	●	●
U6	145	140 ± 2	115	200	10	AC 250	4	8	○	○	●	●	●
						DC 60	4	8	○	○	●	●	●
U7	150	145 ± 2	120	200	10	AC 250	4	8	○	○	●	●	●
						DC 60	4	8	○	○	●	●	●
U16	160	155 ± 2	130	200	10	AC 250	4	8	○	○	●	●	●
						DC 60	4	8	○	○	●	●	●
U32	205	199 ± 3	167	250	10	AC 250	5	10	○	○	●	●	●
						DC 60	5	10	○	○	●	●	●
U31	221	218 ± 2	186	250	10	AC 250	5	10	○	○	●	●	●
						DC 60	5	10	○	○	●	●	●

Note:

"● "Means certificated.

"○ "Means non-certificated.

All Rights Reserved by Xiamen SET Electronics Co., Ltd. 2021-2023 V2.3

Packaging Information

Bulk

Item	PE Bag	PE Bag	Carton
Dimensions (mm)	135 × 85	190 × 180	440 × 300 × 260
Quantity (PCS)	50	300	12000
Gross Weight (kg)			16.0 ± 10%

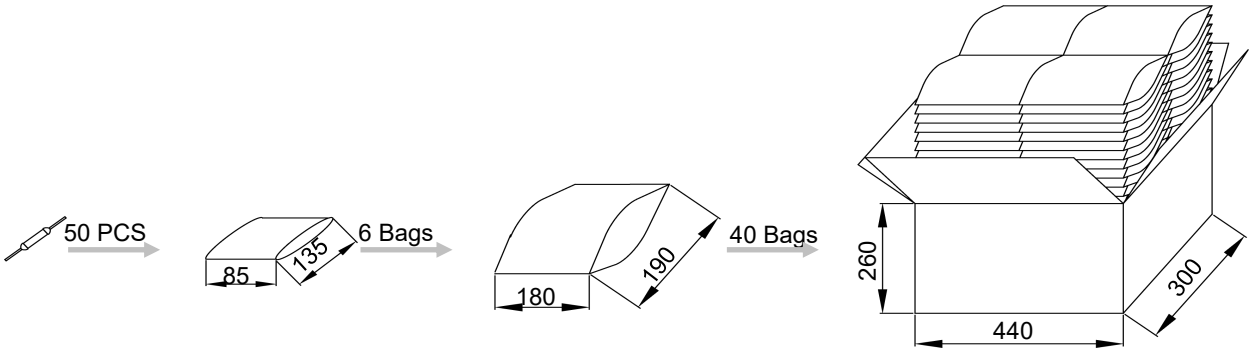

Taping

Item	Scroll	Box	Carton
Dimensions (mm)	Φ 250 × 94	258 × 258 × 98	480 × 300 × 260
Quantity (PCS)	2000	2000	8000
Gross Weight (kg)			10.5 ± 10%

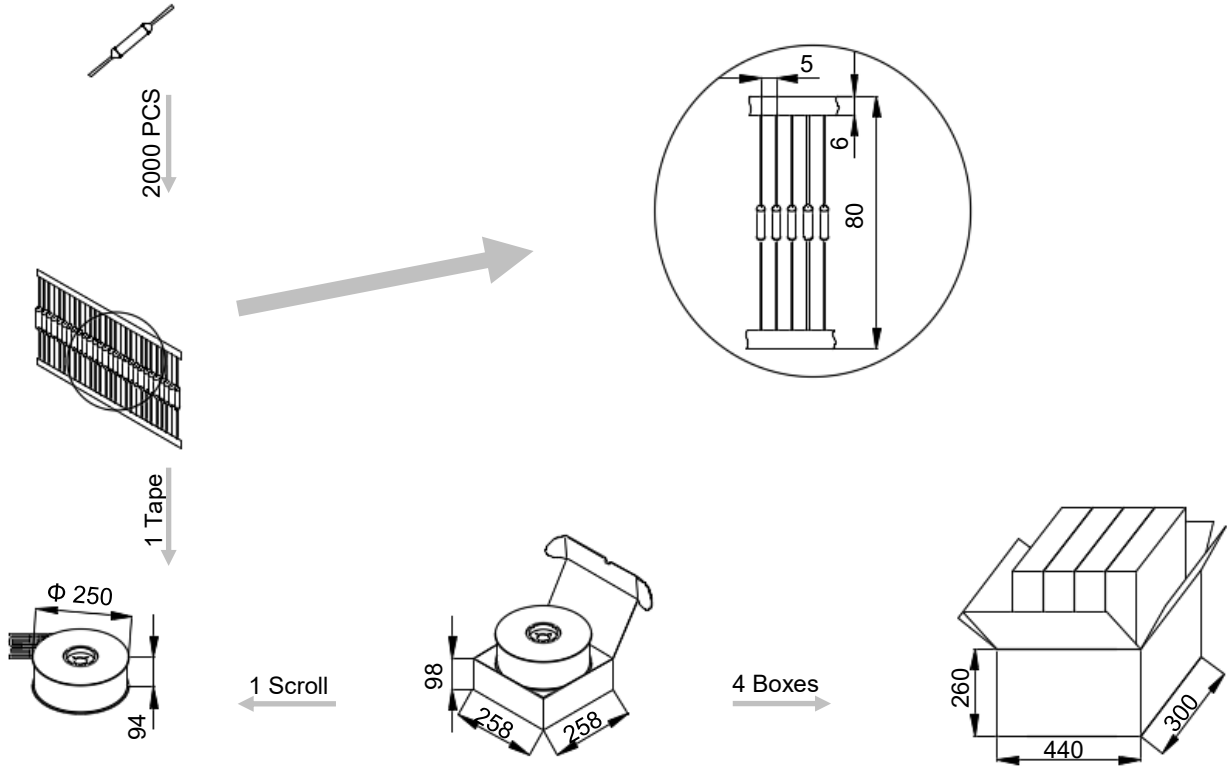

All Rights Reserved by Xiamen SET Electronics Co., Ltd. 2021-2023 V2.3

Product Temp.-Time Curve (For Reference Only)

The Temp.-Time Curve of Thermal-Link in different Temp. oil baths.

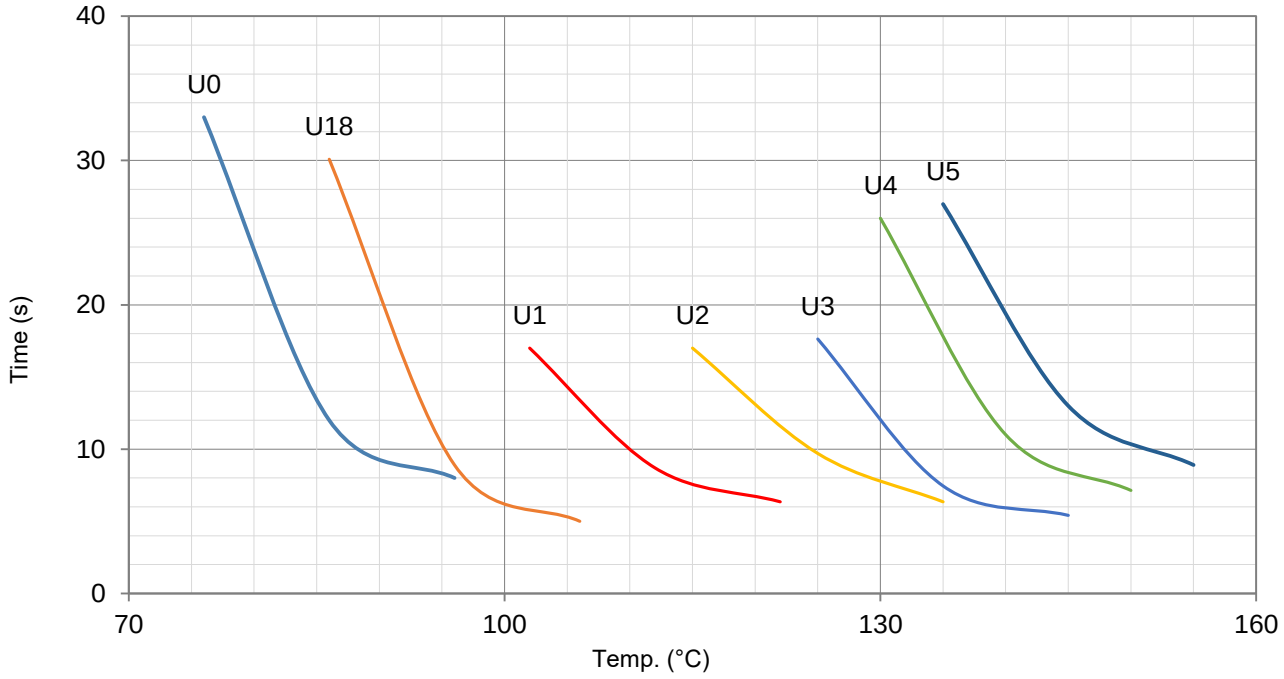

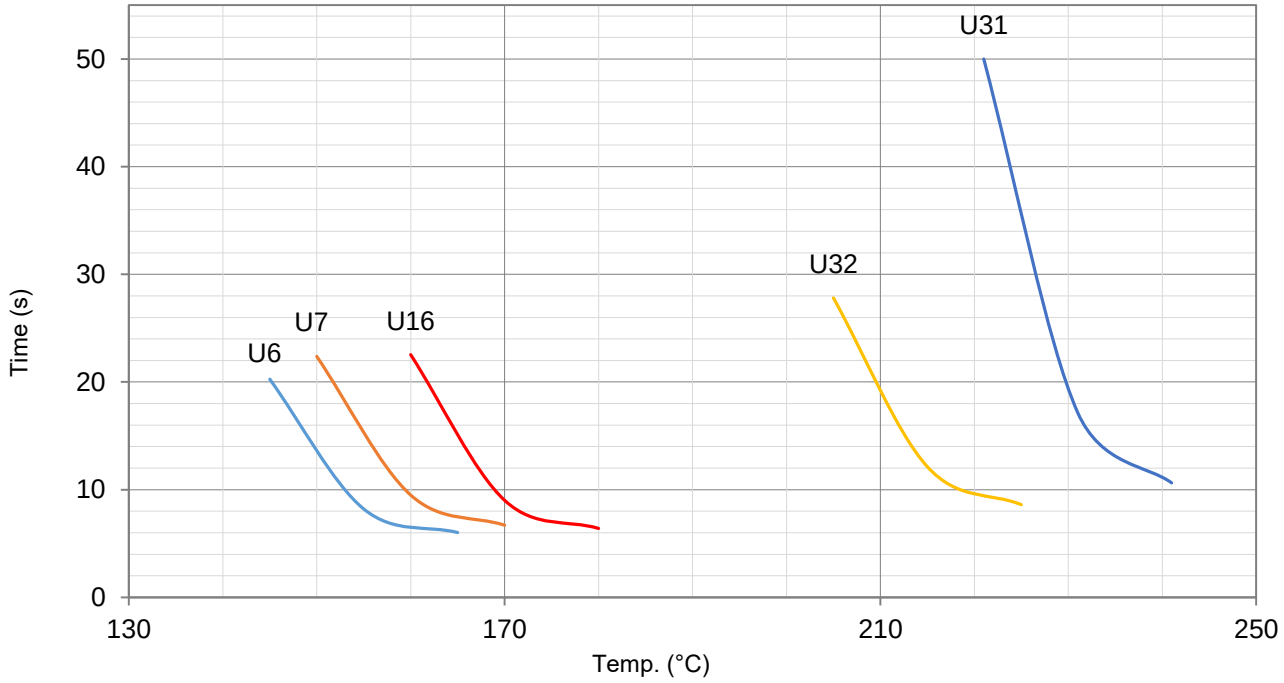

All Rights Reserved by Xiamen SET Electronics Co., Ltd. 2021-2023 V2.3

Product Current-Time Curve (For Reference Only)

The Current-Time Curve shows functioning time at multi-times rated current at room temperature 25 ± 2 °C.

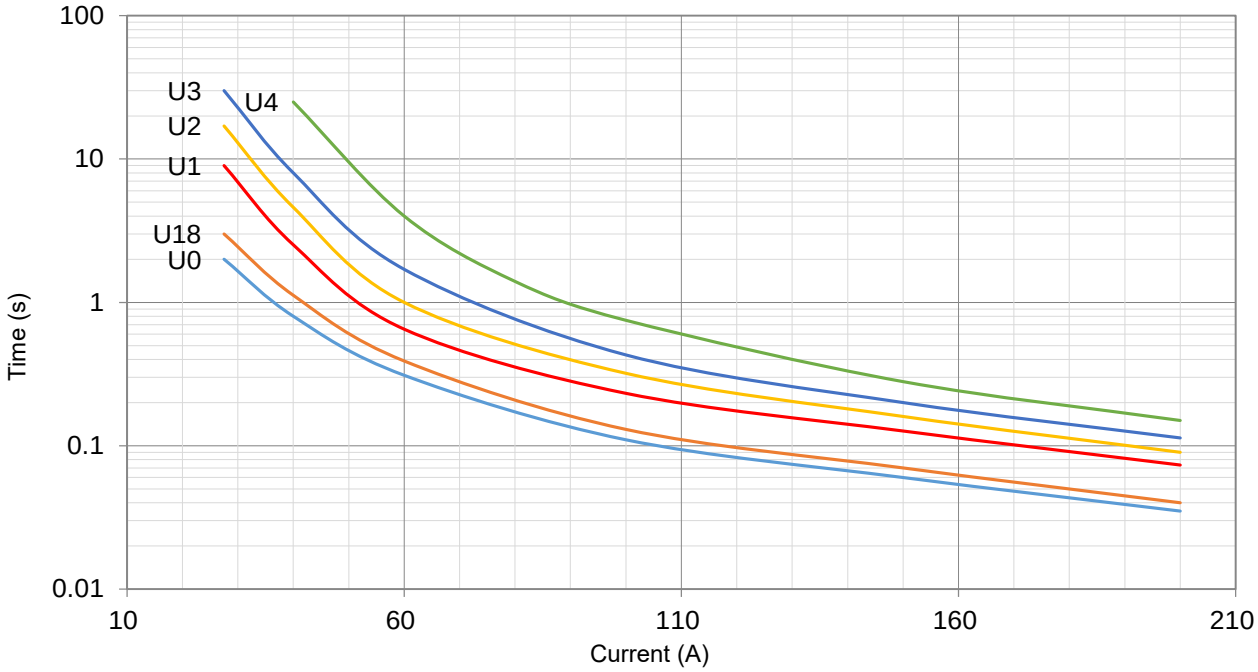

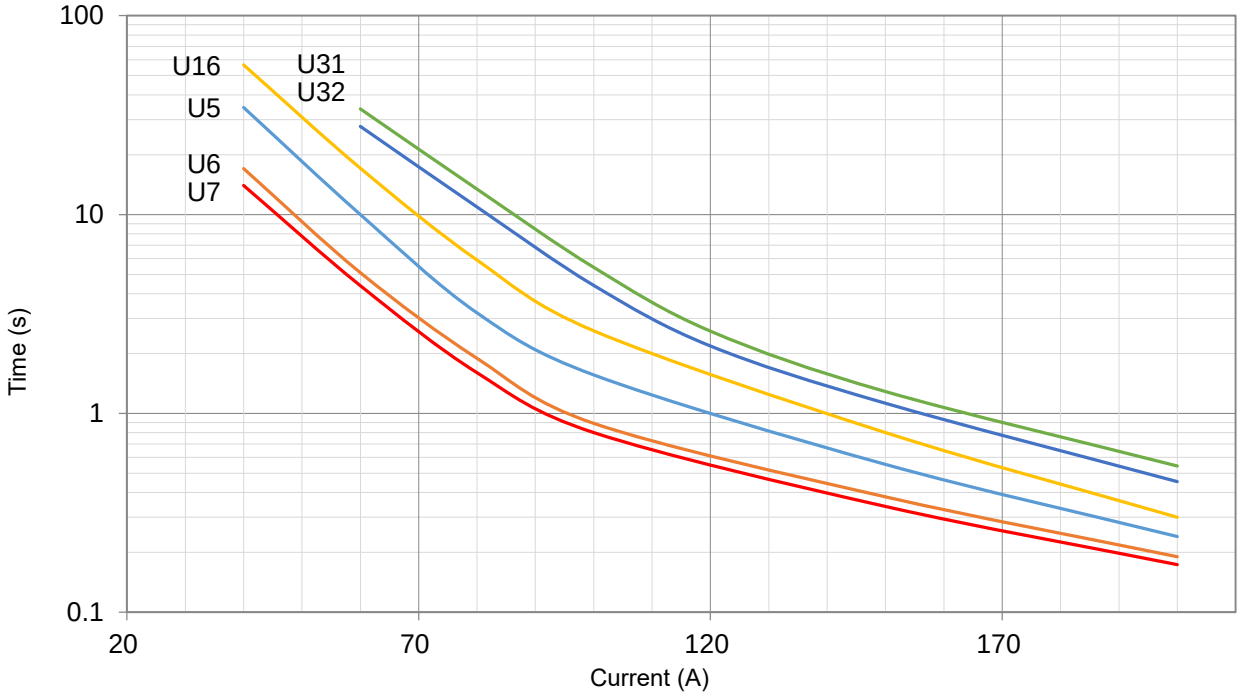

All Rights Reserved by Xiamen SET Electronics Co., Ltd. 2021-2023 V2.3

Applications

- Lamps
- Switched-Mode Power Supplies
- Home Electrical Appliances
- Transformers
- Motors
- Capacitors
- Power Strips

Features

- High Accuracy of Functioning Temp.
- Non-Resettable
- RoHS & REACH Compliant

Customization

- Temp.
- The Length of Lead Wires
- Taping Packing Available
- Lead Wires can be Insulated

Agency Approvals

Agency Mark	Standards	No.
	UL 60691	E214712
	CAN-CSA-E60691	E214712
	EN 60691	R50207621
	GB 9816.1	2020980205000193

Dimensions (mm)

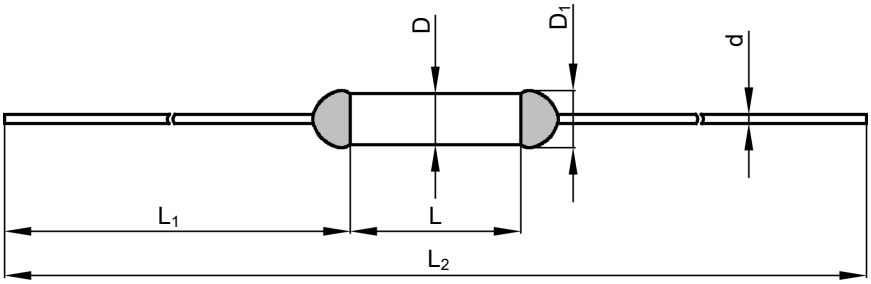

L	L_1	L_2	D	D_1	d
14.0 ± 0.5	33.0 ± 2.0	80.0 ± 3.0	4.0 ± 0.5	≤ 4.5	1.20 ± 0.05

All Rights Reserved by Xiamen SET Electronics Co., Ltd. 2021-2023 V2.3

Specifications

Model	T_f	Fusing Temp.	T_h	T_m	I_r	U_r	I_n 8 / 20 μs (15 Times)	I_{max} 8 / 20 μs (1 Time)	UL	cUL	TUV	CCC	RoHS REACH
	(°C)	(°C)	(°C)	(°C)	(A)	(V)	(kA)	(kA)					
R0	76	73 ± 2	43	200	15	AC 250	5	10	○	○	●	●	●
						DC 60	5	10	○	○	●	●	●
R18	86	81 ± 2	51	200	15	AC 250	5	10	○	○	●	●	●
						DC 60	5	10	○	○	●	●	●
R1	102	98 ± 3	72	200	15	AC 250	6	12	○	○	●	●	●
						DC 60	6	12	○	○	●	●	●
R2	115	112± 2	85	200	15	AC 250	6	12	●	●	●	●	●
						DC 60	6	12	○	○	●	●	●
R3	125	121 ± 2	95	200	15	AC 250	6	12	○	○	●	●	●
						DC 60	6	12	○	○	●	●	●
R4	130	125 ± 2	100	200	15	AC 250	6	12	○	○	●	●	●
						DC 60	6	12	○	○	●	●	●
R5	135	130 ± 2	105	200	15	AC 250	6	12	●	●	●	●	●
						DC 60	6	12	○	○	●	●	●
R6	145	140 ± 2	115	200	15	AC 250	6	12	○	○	●	●	●
						DC 60	6	12	○	○	●	●	●
R7	150	145 ± 2	120	200	15	AC 250	6	12	○	○	●	●	●
						DC 60	6	12	○	○	●	●	●
R16	160	155 ± 2	130	200	15	AC 250	6	12	○	○	●	●	●
						DC 60	6	12	○	○	●	●	●
R32	205	199 ± 3	167	250	15	AC 250	7	14	○	○	●	●	●
						DC 60	7	14	○	○	●	●	●
R31	221	218 ± 2	186	250	15	AC 250	7	14	○	○	●	●	●
						DC 60	7	14	○	○	●	●	●

Note:

"● "Means certificated.

"○ "Means non-certificated.

All Rights Reserved by Xiamen SET Electronics Co., Ltd. 2021-2023 V2.3

Packaging Information

Bulk

Item	PE Bag	PE Bag	Carton
Dimensions (mm)	135 × 85	190 × 180	440 × 300 × 260
Quantity (PCS)	50	300	12000
Gross Weight (kg)			16.0 ± 10%

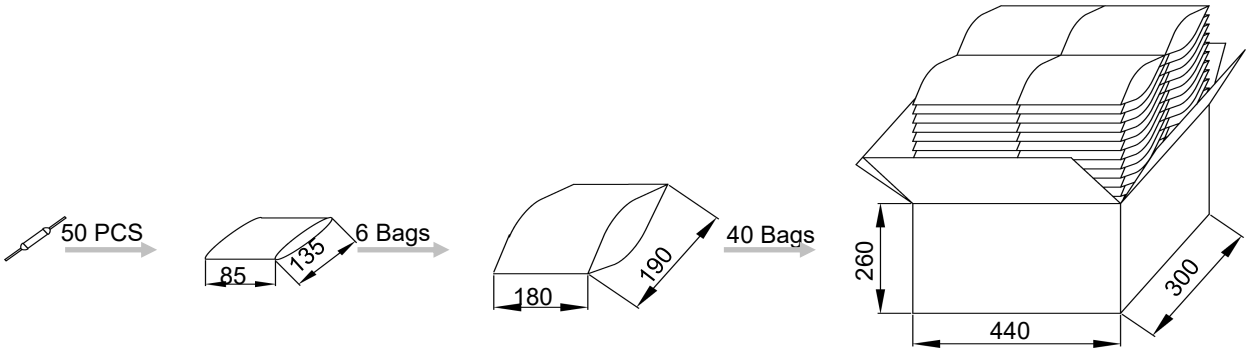

Taping

Item	Scroll	Box	Carton
Dimensions (mm)	Φ 250 × 94	258 × 258 × 98	480 × 300 × 260
Quantity (PCS)	2000	2000	8000
Gross Weight (kg)			10.5 ± 10%

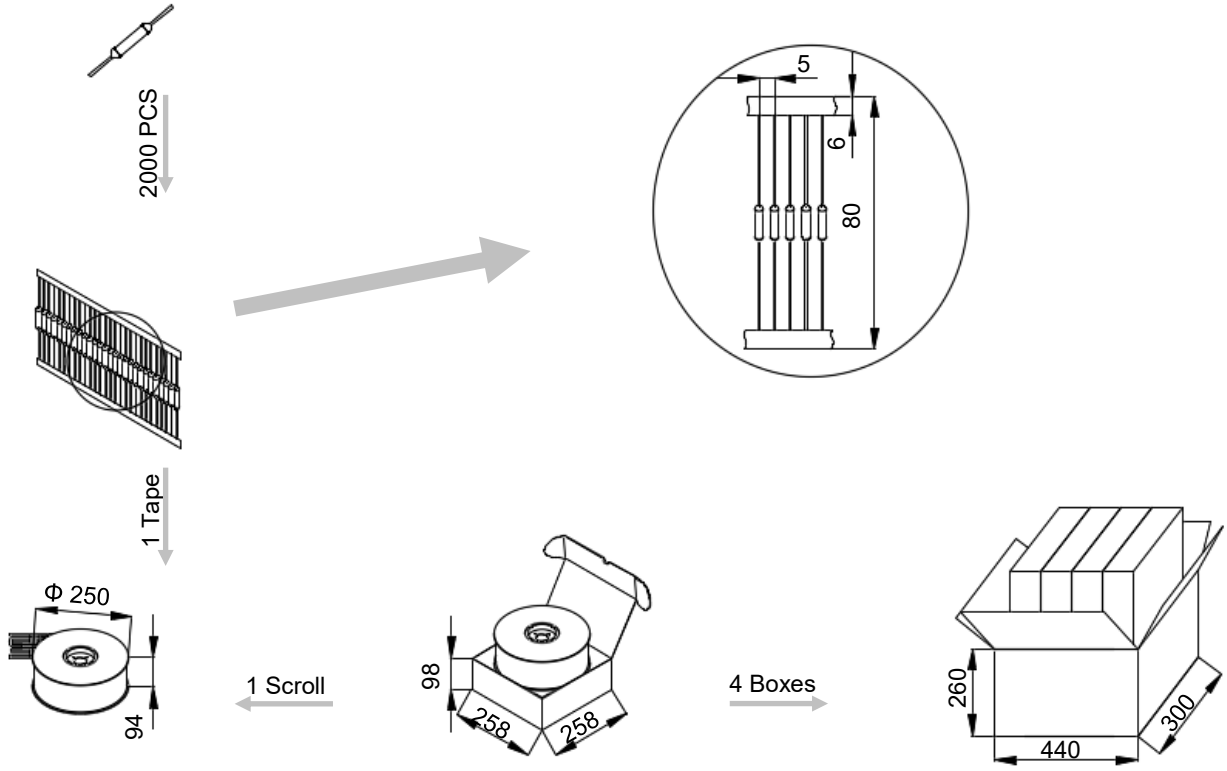

All Rights Reserved by Xiamen SET Electronics Co., Ltd. 2021-2023 V2.3

Product Temp.-Time Curve (For Reference Only)

The Temp.-Time Curve of Thermal-Link in different Temp. oil baths.

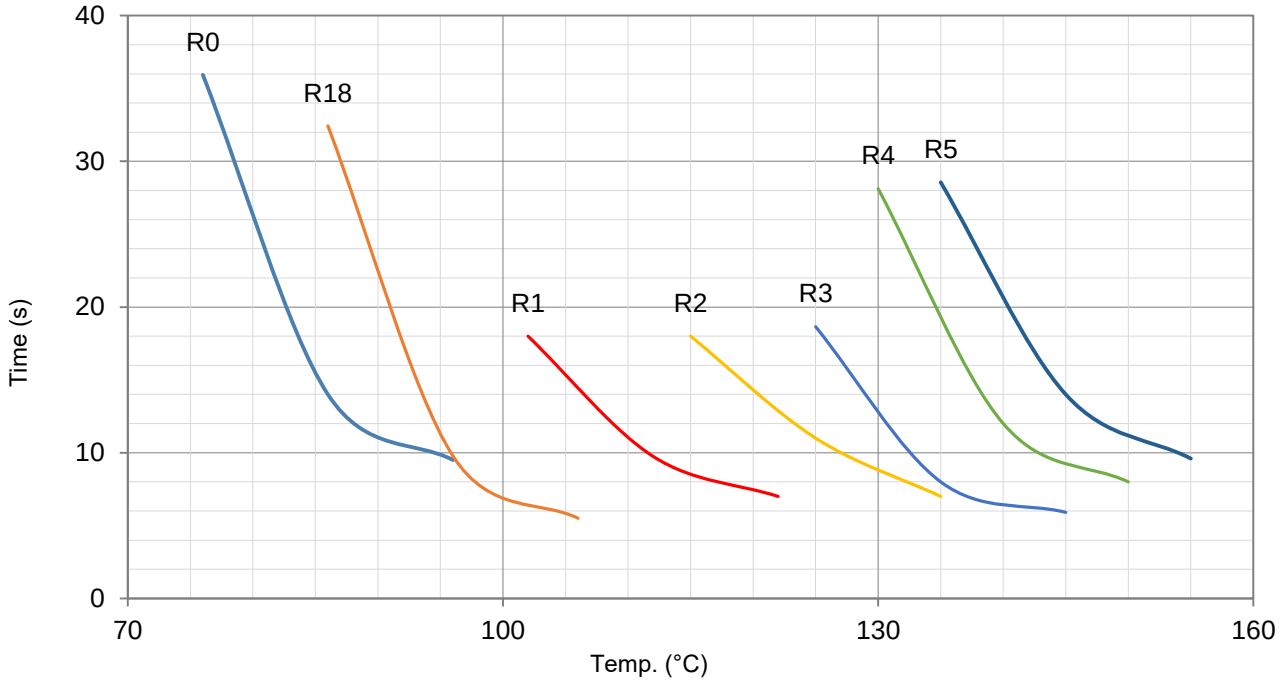

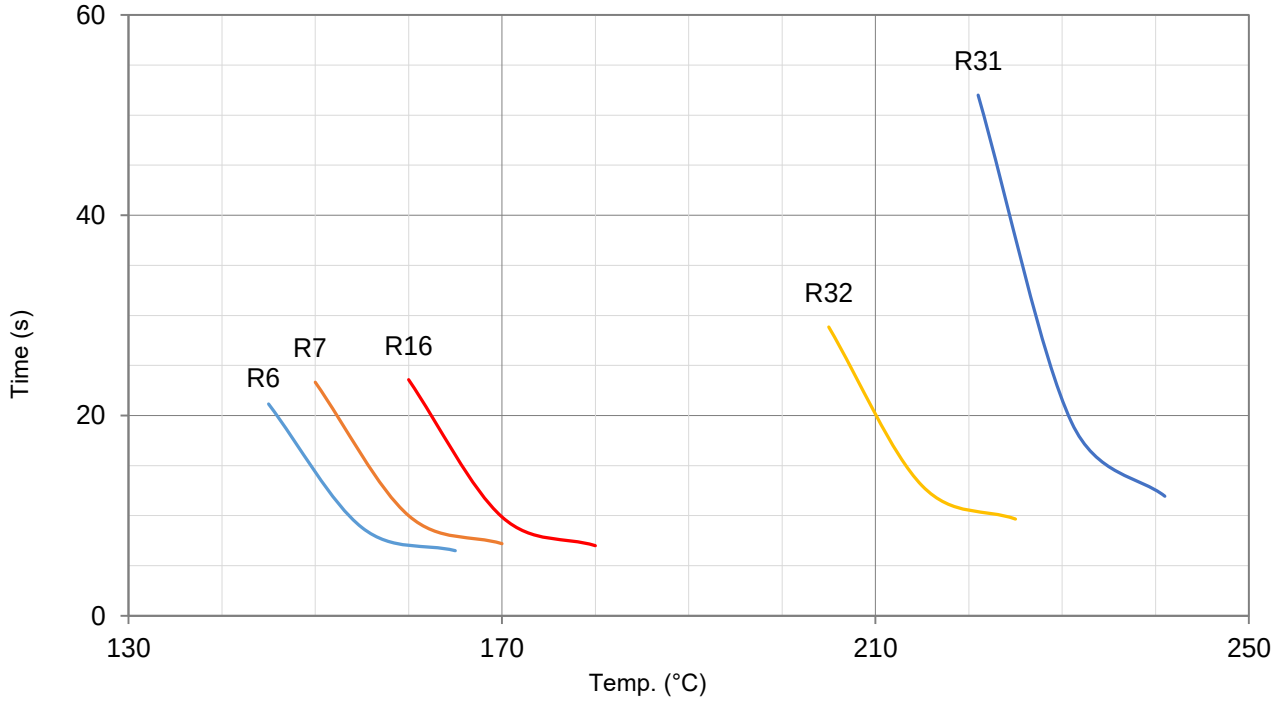

All Rights Reserved by Xiamen SET Electronics Co., Ltd. 2021-2023 V2.3

Product Current-Time Curve (For Reference Only)

The Current-Time Curve shows functioning time at multi-times rated current at room temperature 25 ± 2 °C.

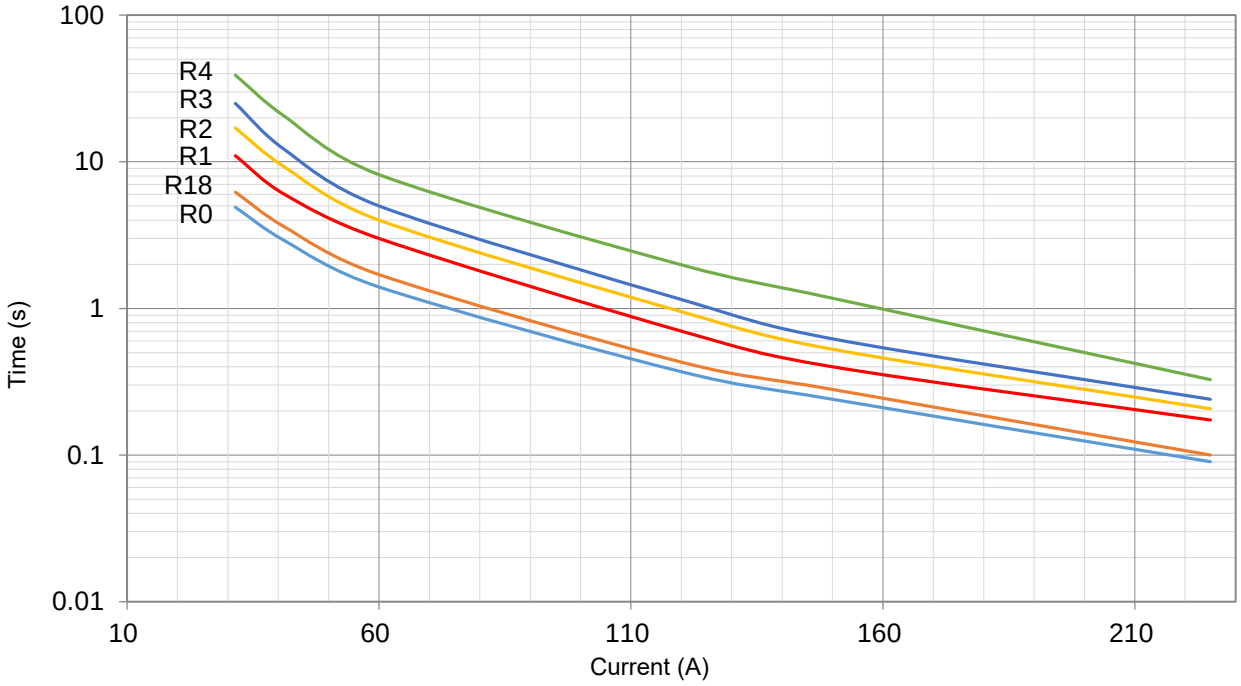

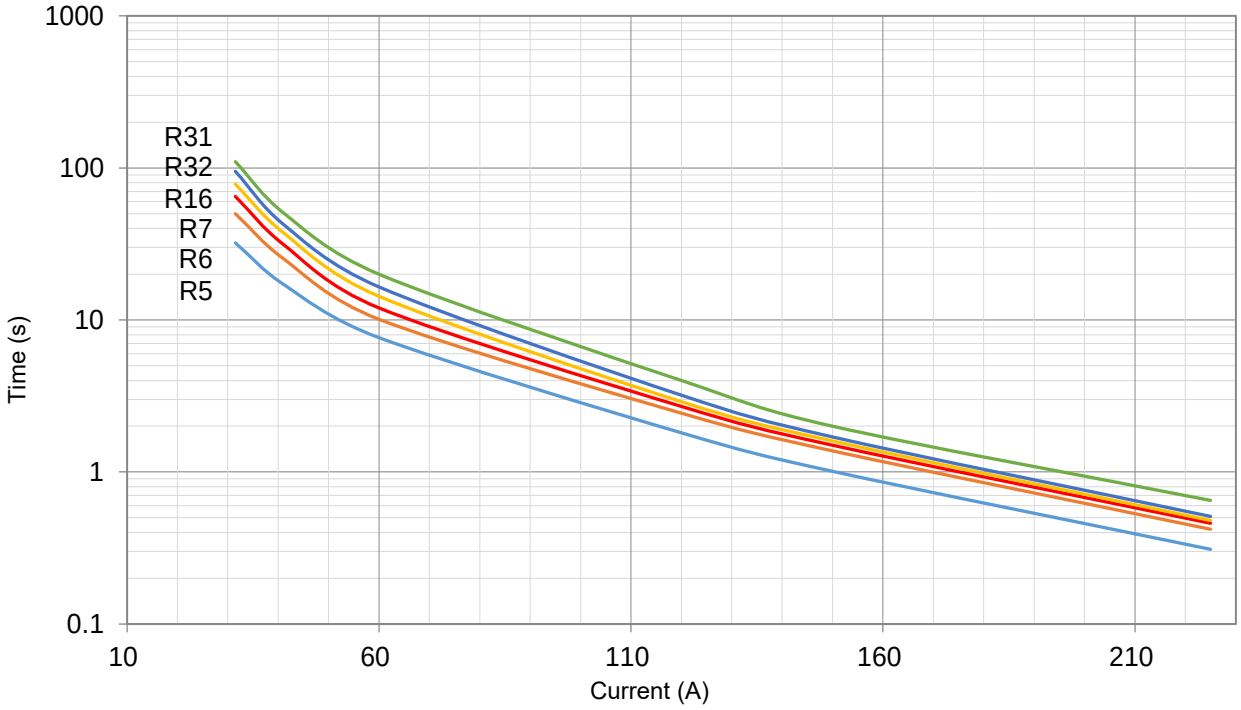

All Rights Reserved by Xiamen SET Electronics Co., Ltd. 2021-2023 V2.3

Applications

- Batteries
- Electric Blankets
- Electric Aroma Diffusers
- Motors
- Lamps
- Switched-Mode Power Supplies
- Transformers

Features

- High Accuracy of Functioning Temp.
- Non-Resettable
- RoHS & REACH Compliant

Customization

- Temp.
- The Length of Lead Wires
- Taping Packing Available
- Lead Wires can be Insulated

Agency Approvals

Agency Mark	Standards	No.
®	UL 60691	E214712
c ®	CAN-CSA-E60691	E214712

Dimensions (mm)

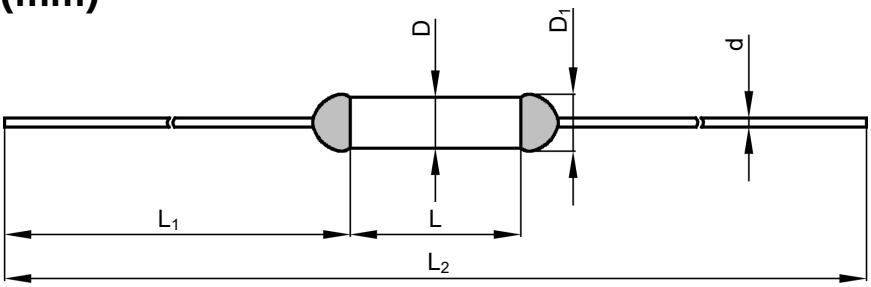

L	L_1	L_2	D	D_1	d
6.0 ± 0.5	35.0 ± 2.0	76.0 ± 3.0	1.5 ± 0.5	≤ 2.0	0.58 ± 0.05

All Rights Reserved by Xiamen SET Electronics Co., Ltd. 2021-2023 V2.3

Specifications

Model	T_f	Fusing Temp.	T_h	T_m	I_r	U_r	UL	cUL	RoHS REACH
	(°C)	(°C)	(°C)	(°C)	(A)	(V)			
SF2	115	111 ± 2	90	200	3	DC 60	●	●	●
SF4	130	125 ± 2	95	200	3	DC 60	●	●	●
SF8	133	130 ± 2	110	200	3	DC 60	●	●	●
SF13	139	135 ± 2	85	200	5	DC 60	●	●	●

Note:
"● "Means certificated.
"○ "Means non-certificated.

ATCO

All Rights Reserved by Xiamen SET Electronics Co., Ltd. 2021-2023 V2.3

Packaging Information

Bulk

Item	PE Bag	PE Bag	Carton
Dimensions (mm)	135 × 85	190 × 180	440 × 300 × 220
Quantity (PCS)	100	1000	50000
Gross Weight (kg)			11.0 ± 10%

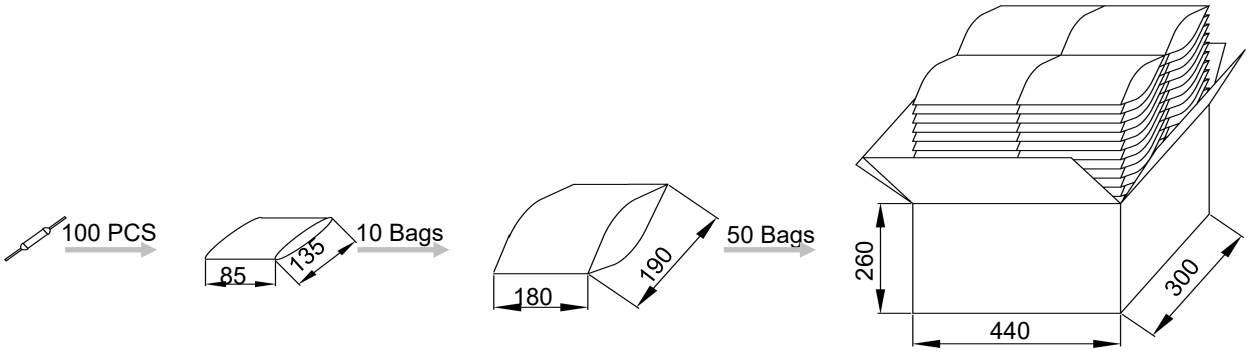

Taping

Item	Scroll	Box	Carton
Dimensions (mm)	Φ 250 × 94	258 × 258 × 98	480 × 300 × 260
Quantity (PCS)	2500	2500	10000
Gross Weight (kg)			12.0 ± 10%

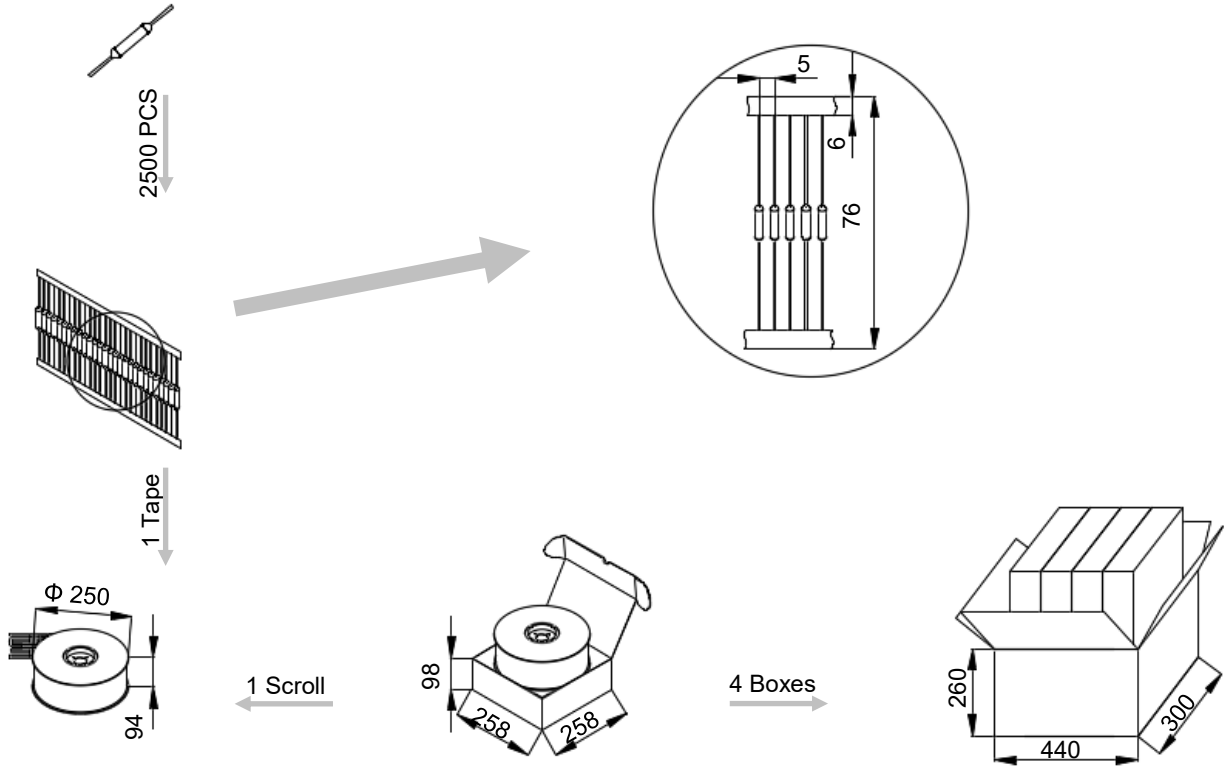

All Rights Reserved by Xiamen SET Electronics Co., Ltd. 2021-2023 V2.3

Product Temp.-Time Curve (For Reference Only)

The Temp.-Time Curve of Thermal-Link in different Temp. oil baths.

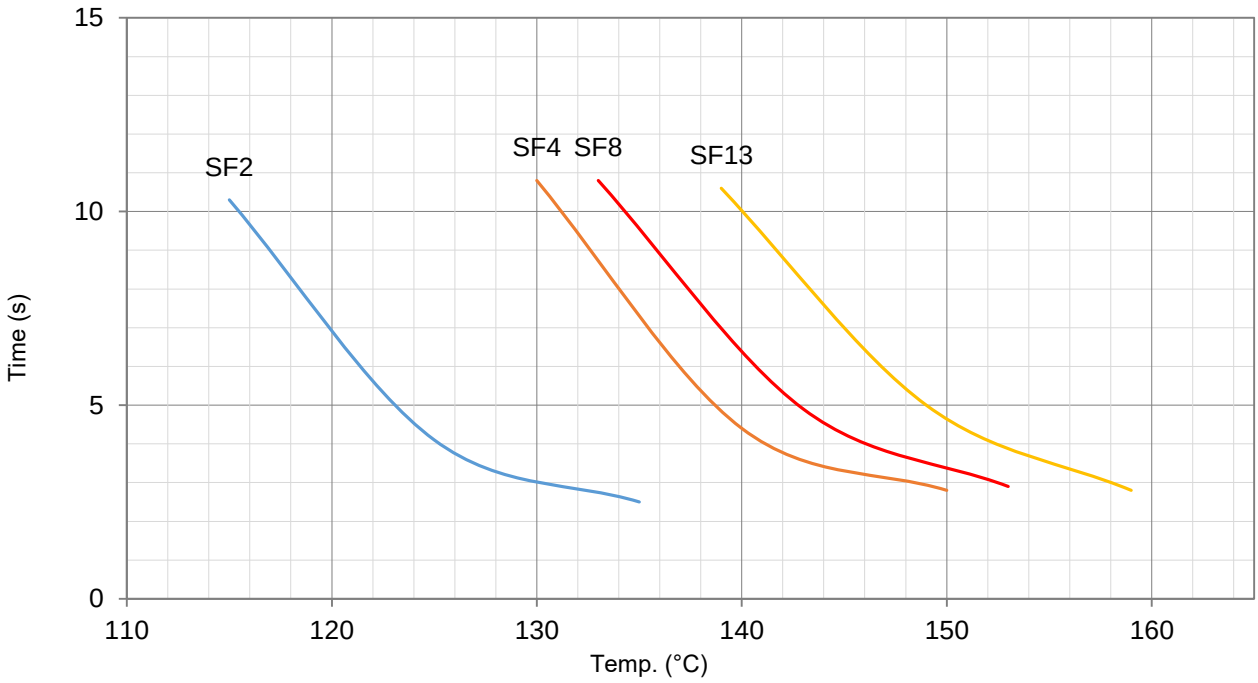

Product Current-Time Curve (For Reference Only)

The Current-Time Curve shows functioning time at multi-times rated current at room temperature 25 ± 2 °C.

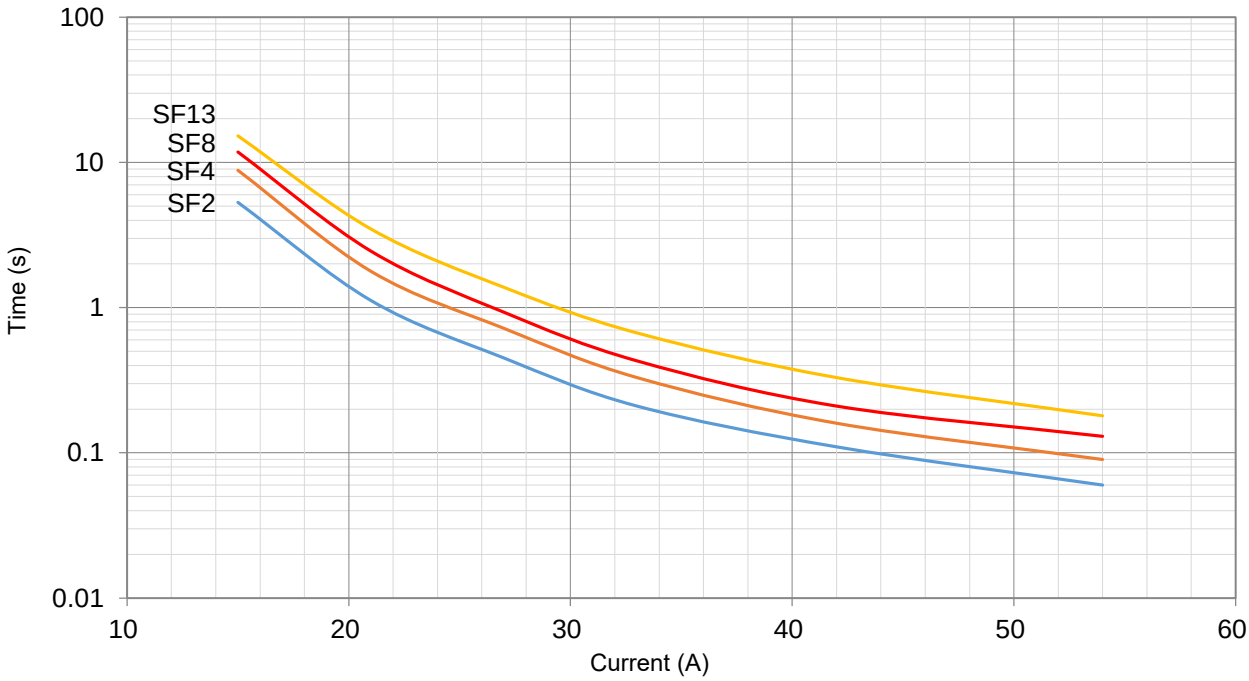

All Rights Reserved by Xiamen SET Electronics Co., Ltd. 2021-2023 V2.3

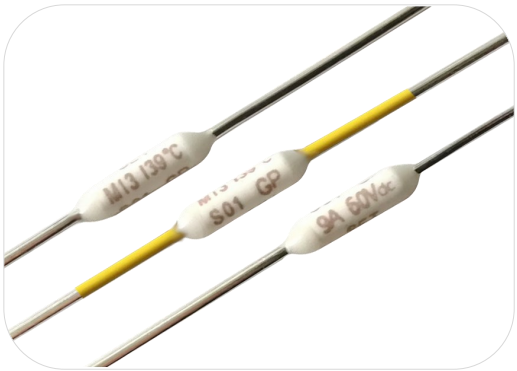

Applications

- Lamps
- Switched-Mode Power Supplies
- Home Electrical Appliances
- Transformers
- Motors
- Capacitors
- Power Strips

Features

- High Accuracy of Functioning Temp.
- Non-Resettable
- RoHS & REACH Compliant

Customization

- Temp.
- The Length of Lead Wires
- Taping Packing Available
- Lead Wires can be Insulated

ATCO

Agency Approvals

Agency Mark	Standards	No.
	UL 60691	E214712
	CAN-CSA-E60691	E214712
	EN 60691	R50415881

Dimensions (mm)

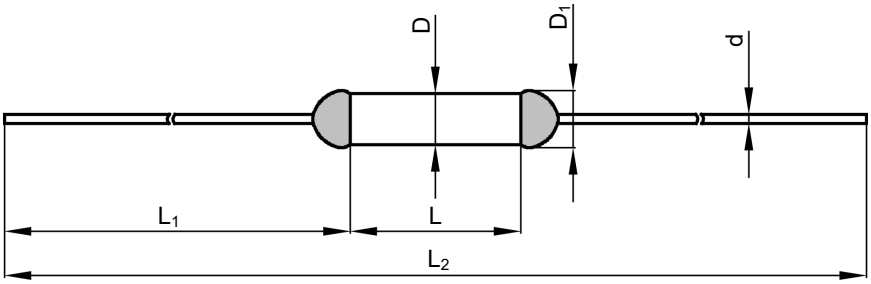

L	L_1	L_2	D	D_1	d
6.5 ± 0.5	37.0 ± 2.0	80.5 ± 3.0	2.1 ± 0.5	≤ 2.6	0.80 ± 0.05

All Rights Reserved by Xiamen SET Electronics Co., Ltd. 2021-2023 V2.3

Specifications

Model	T_f	Fusing Temp.	T_h	T_m	I_r	U_r	I_n 8 / 20 μs (15 Times)	I_{max} 8 / 20 μs (1 Time)	UL	cUL	TUV	RoHS REACH
	(°C)	(°C)	(°C)	(°C)	(A)	(V)	(kA)	(kA)				
M13	139	135 ± 2	85	200	9	DC 60	3.5	7	●	●	●	●

Note:

"● "Means certificated.

"○ "Means non-certificated.

All Rights Reserved by Xiamen SET Electronics Co., Ltd. 2021-2023 V2.3

Packaging Information

Bulk

Item	PE Bag	PE Bag	Carton
Dimensions (mm)	135 × 85	190 × 180	440 × 300 × 220
Quantity (PCS)	100	1000	30000
Gross Weight (kg)			13.0 ± 10%

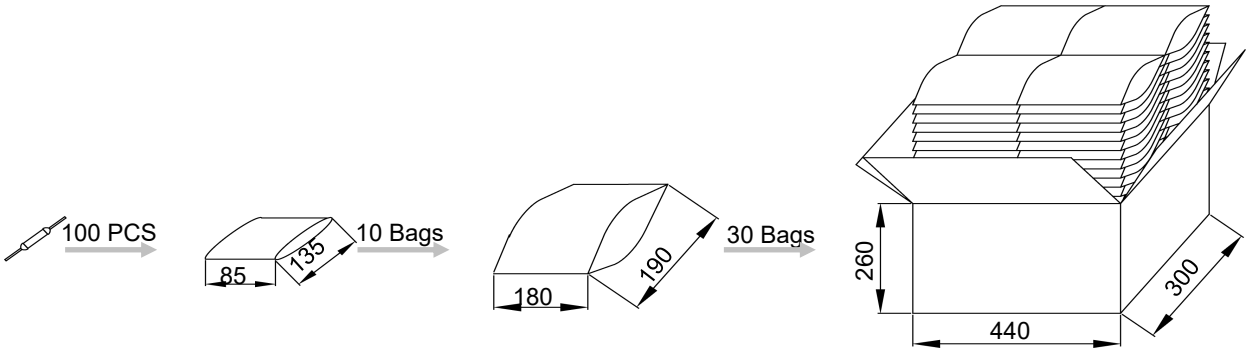

Taping

Item	Scroll	Box	Carton
Dimensions (mm)	Φ 250 × 94	258 × 258 × 98	480 × 300 × 260
Quantity (PCS)	2500	2500	10000
Gross Weight (kg)			12.0 ± 10%

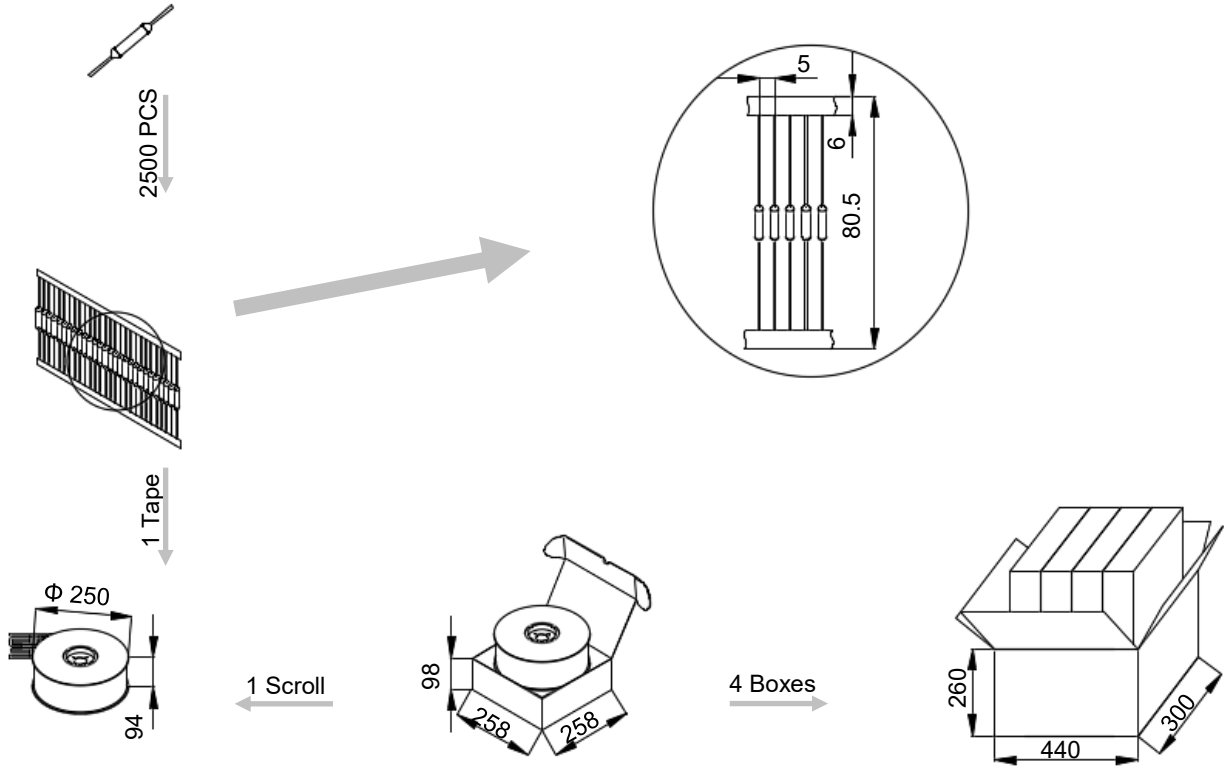

All Rights Reserved by Xiamen SET Electronics Co., Ltd. 2021-2023 V2.3

Product Temp.-Time Curve (For Reference Only)

The Temp.-Time Curve of Thermal-Link in different Temp. oil bath.

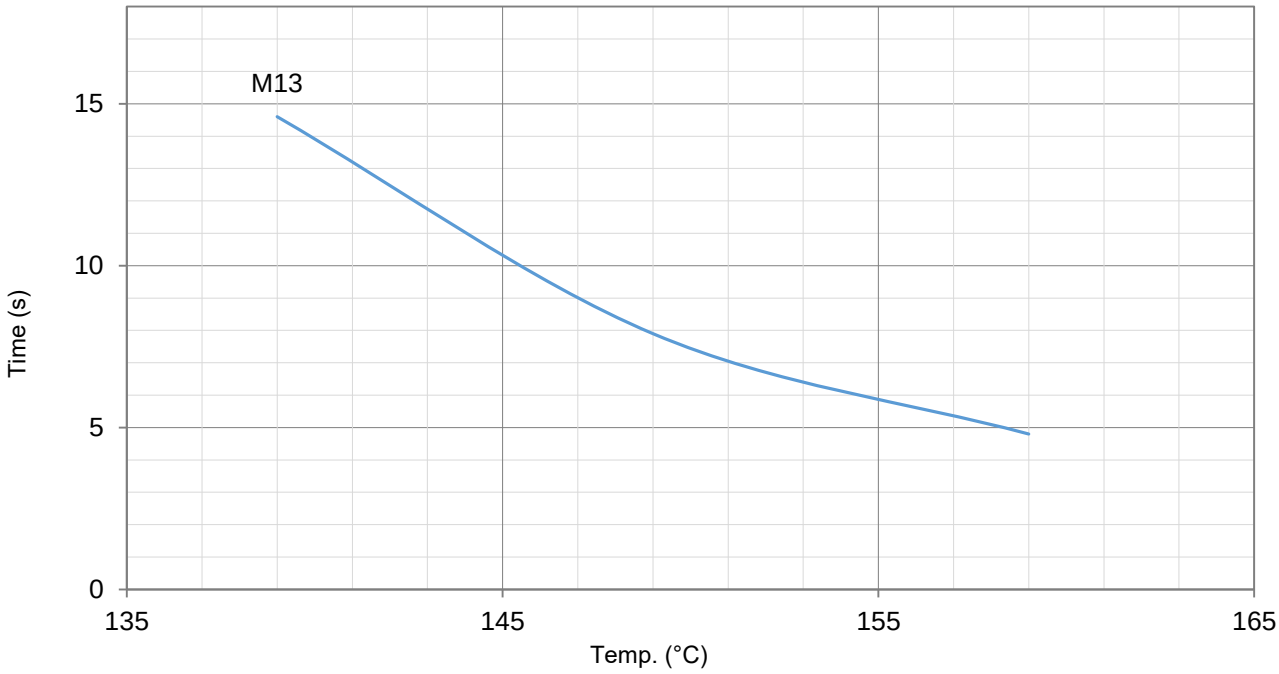

Product Current-Time Curve (For Reference Only)

The Current-Time Curve shows functioning time at multi-times rated current at room temperature 25 ± 2 °C.

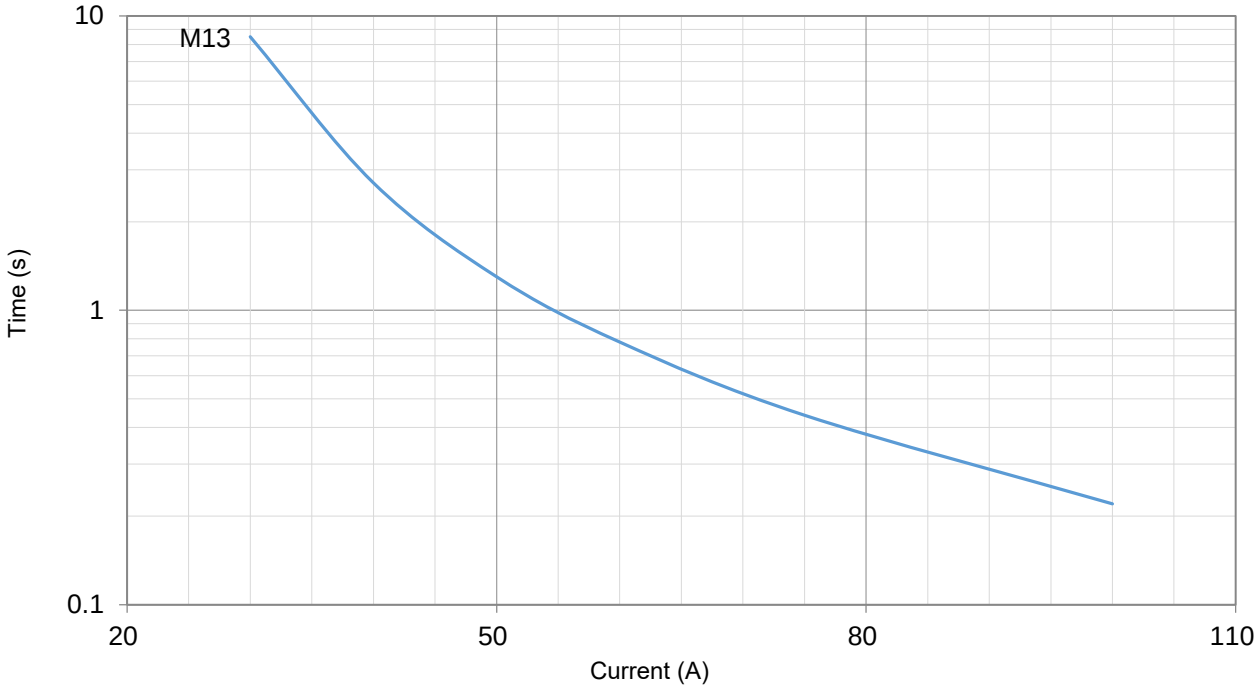

All Rights Reserved by Xiamen SET Electronics Co., Ltd. 2021-2023 V2.3

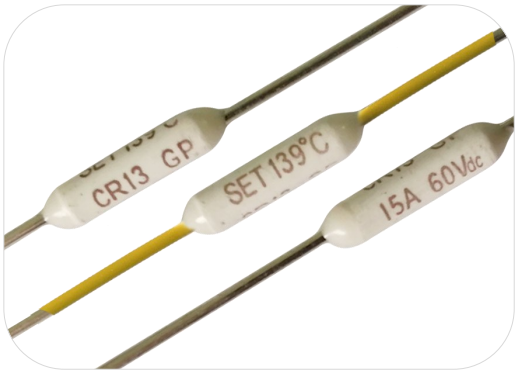

Applications

- Lamps
- Switched-Mode Power Supplies
- Home Electrical Appliances
- Transformers
- Motors
- Capacitors
- Power Strips

Features

- High Accuracy of Functioning Temp.
- Non-Resettable
- RoHS & REACH Compliant

Customization

- Temp.
- The Length of Lead Wires
- Taping Packing Available
- Lead Wires can be Insulated

Agency Approvals

Agency Mark	Standards	No.
	UL 60691	E214712
	CAN-CSA-E60691	E214712
	EN 60691	R50415812

Dimensions (mm)

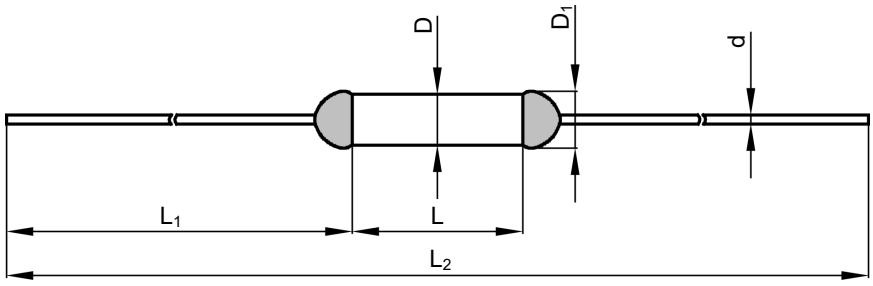

L	L_1	L_2	D	D_1	d
11.5 ± 0.5	34.0 ± 2.0	79.5 ± 3.0	3.3 ± 0.5	≤ 3.8	1.00 ± 0.05

All Rights Reserved by Xiamen SET Electronics Co., Ltd. 2021-2023 V2.3

Specifications

Model	T_f	Fusing Temp.	T_h	T_m	I_r	U_r	I_n 8 / 20 μs (15 Times)	I_{max} 8 / 20 μs (1 Time)	UL	cUL	TUV	RoHS REACH
	(°C)	(°C)	(°C)	(°C)	(A)	(V)	(kA)	(kA)	UL	cUL	TUV	
CR13	139	135 ± 2	85	200	15	DC 60	6	12	●	●	●	●

Note:

"● "Means certificated.

"○ "Means non-certificated.

ATCO

All Rights Reserved by Xiamen SET Electronics Co., Ltd. 2021-2023 V2.3

Packaging Information

Bulk

Item	PE Bag	PE Bag	Carton
Dimensions (mm)	135 × 85	190 × 180	440 × 300 × 220
Quantity (PCS)	100	1000	25000
Gross Weight (kg)			16.0 ± 10%

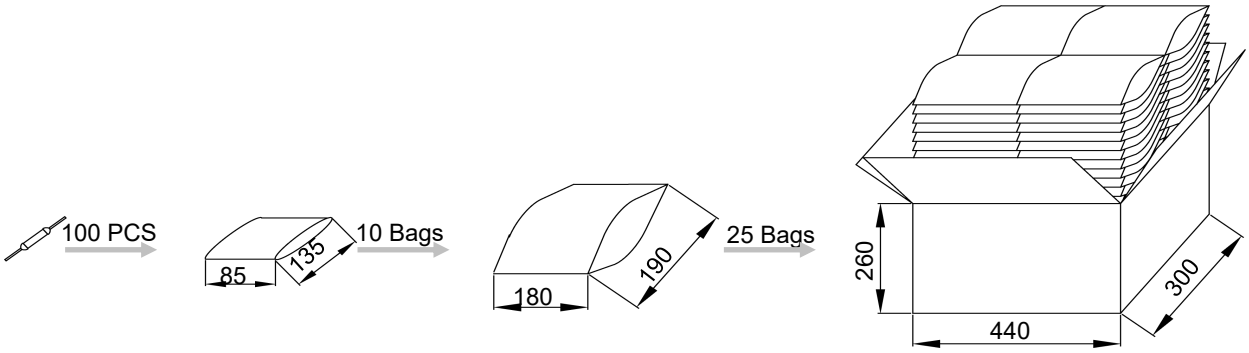

Taping

Item	Scroll	Box	Carton
Dimensions (mm)	Φ 250 × 94	258 × 258 × 98	480 × 300 × 260
Quantity (PCS)	2000	2000	8000
Gross Weight (kg)			12.0 ± 10%

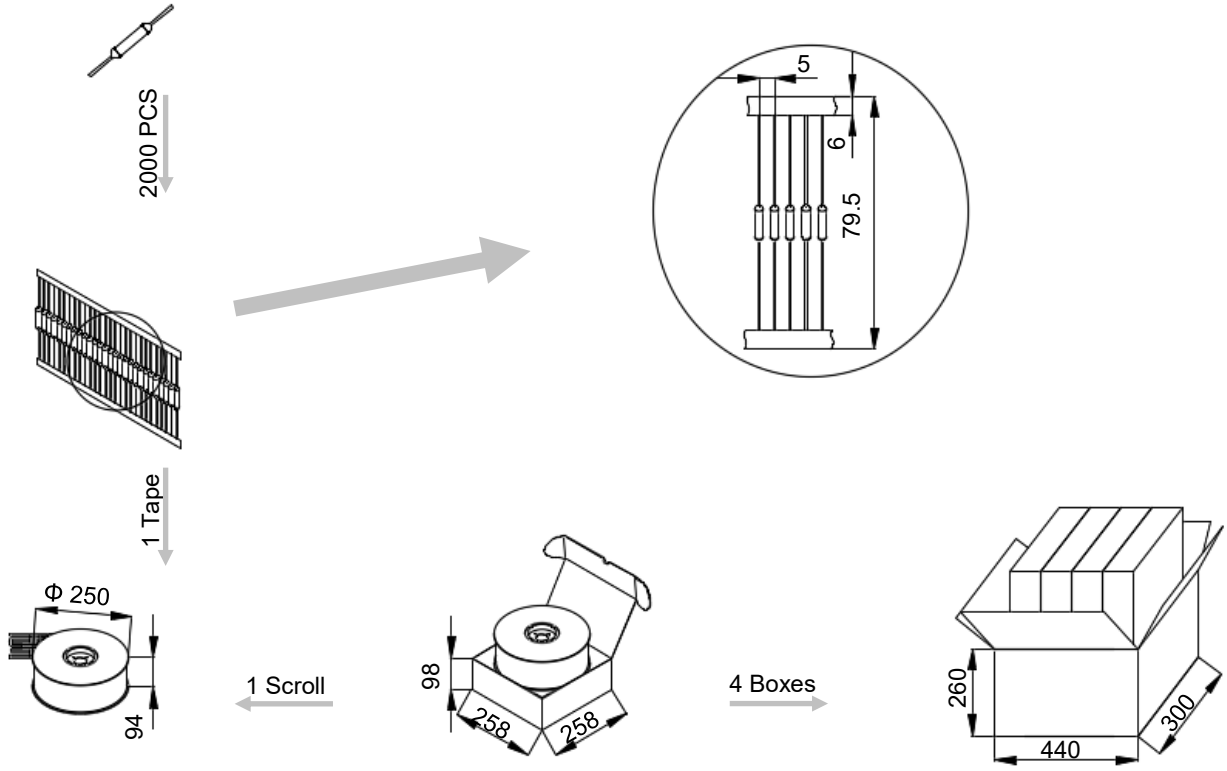

All Rights Reserved by Xiamen SET Electronics Co., Ltd. 2021-2023 V2.3

Product Temp.-Time Curve (For Reference Only)

The Temp.-Time Curve of Thermal-Link in different Temp. oil baths.

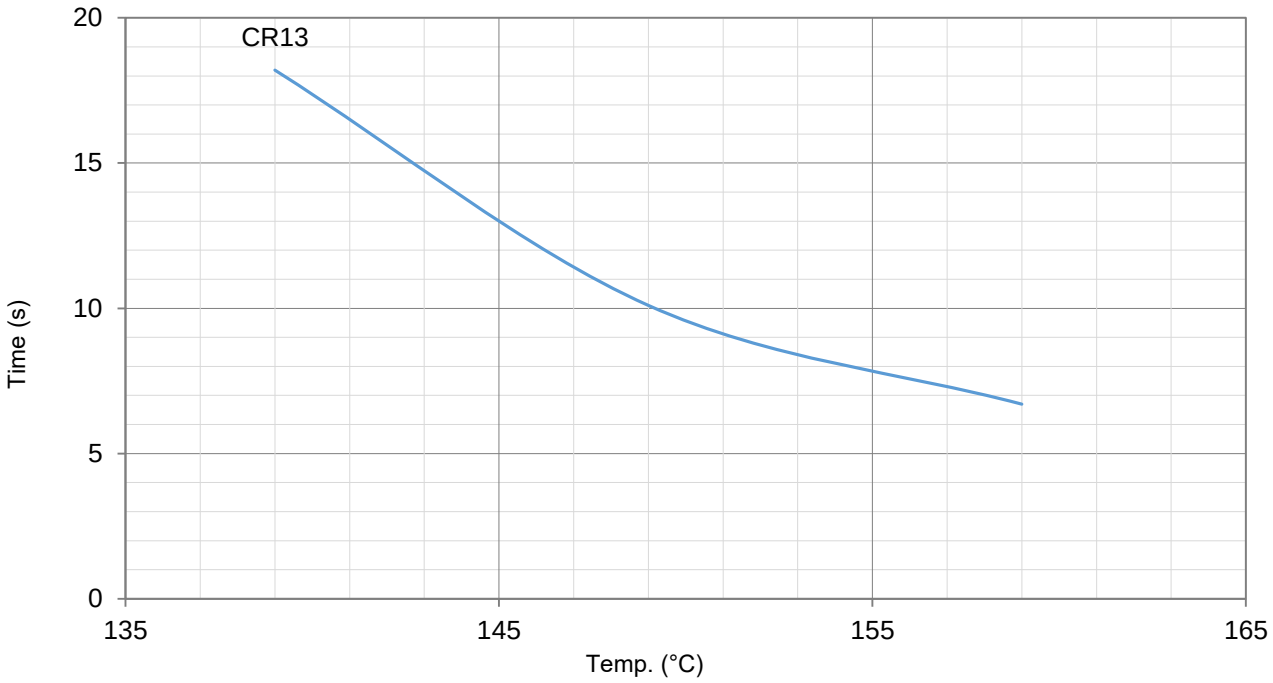

Product Current-Time Curve (For Reference Only)

The Current-Time Curve shows functioning time at multi-times rated current at room temperature 25 ± 2 °C.

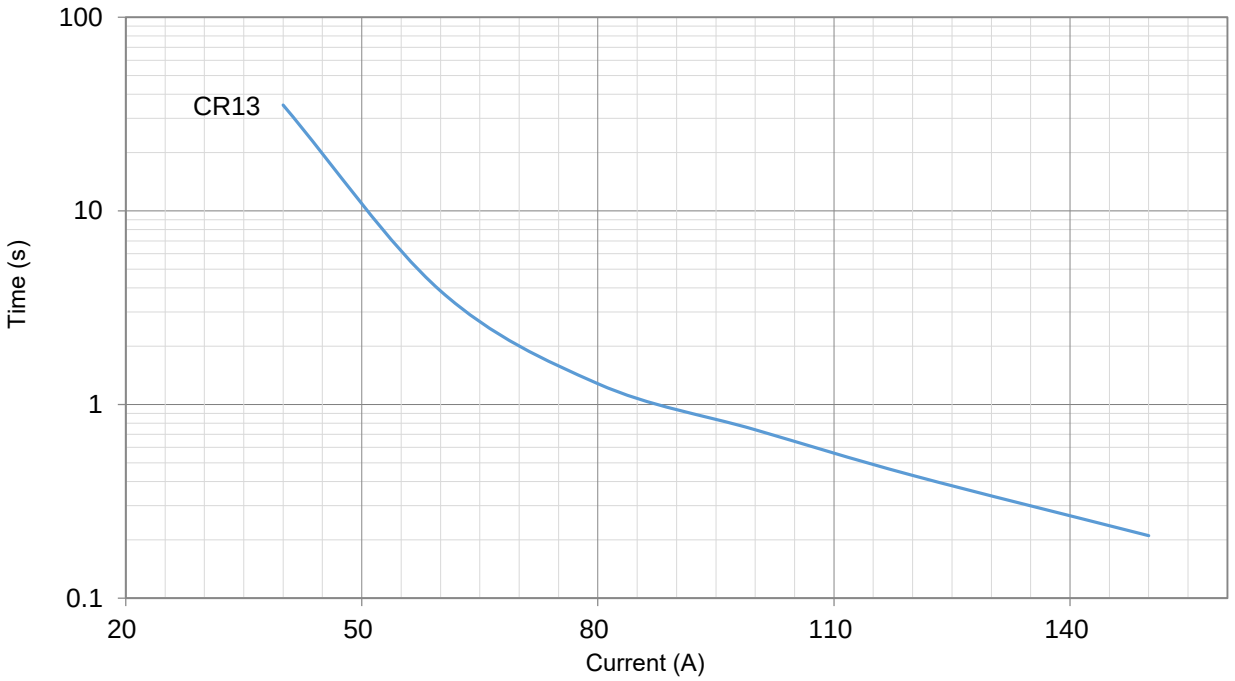

All Rights Reserved by Xiamen SET Electronics Co., Ltd. 2021-2023 V2.3

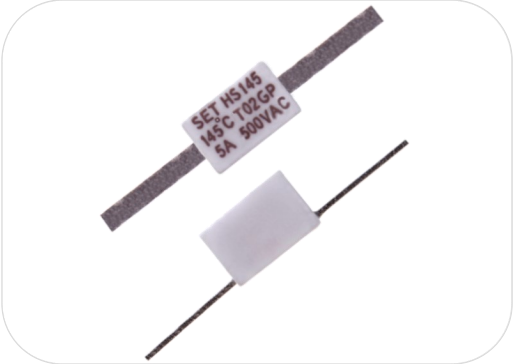

Applications

- Surge Protective Devices
- Batteries
- Automobile Electronic

Features

- High Accuracy of Functioning Temp.
- Non-Resettable
- High Operating Voltage
- RoHS & REACH Compliant

Customization

- Temp.
- The Length of Lead Wires

ATCO

Agency Approvals

Agency Mark	Standards	No.
	UL 60691	E214712
	CAN-CSA-E60691	E214712
	EN 60691	R50338012
	GB 9816.1	2020980205000178

Dimensions (mm)

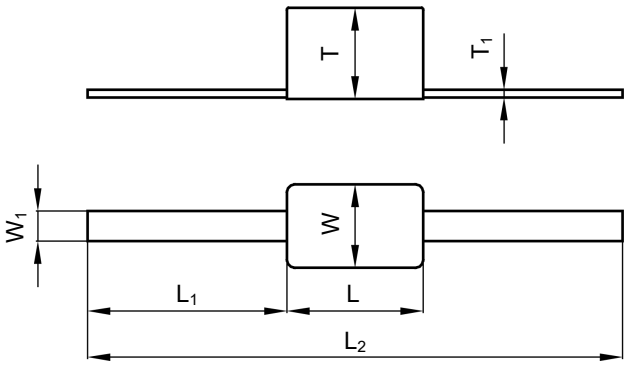

L	L_1	L_2	W	W_1	T	T_1
9.6 ± 1.0	30.0 ± 2.0	70.0 ± 3.0	6. 0 ± 1.0	2.0 ± 0.5	6.0 ± 1.0	0.50 ± 0.05

All Rights Reserved by Xiamen SET Electronics Co., Ltd. 2021-2023 V2.3

Specifications

Model	T_f	Fusing Temp.	T_h	T_m	I_r	额定电压 U_r	UL	cUL	TUV	CCC	RoHS REACH
	(°C)	(°C)	(°C)	(°C)	(A)	(V)					
HS125	125	121 ± 2	98	250	5	AC 500 DC 200	●	●	●	●	●
HS136	136	131 ± 2	111	250	5	AC 500 DC 200	●	●	●	●	●
HS145	145	140 ± 2	118	250	5	AC 500 DC 200	●	●	●	●	●

Note:

"● "Means certificated.

"○ "Means non-certificated.

Packaging Information

Bulk

Item	PE Bag	Box	Carton
Dimensions (mm)	135 × 85	255 × 88 × 98	440 × 300 × 220
Quantity (PCS)	20	300	3000
Gross Weight (kg)			16.0 ± 10%

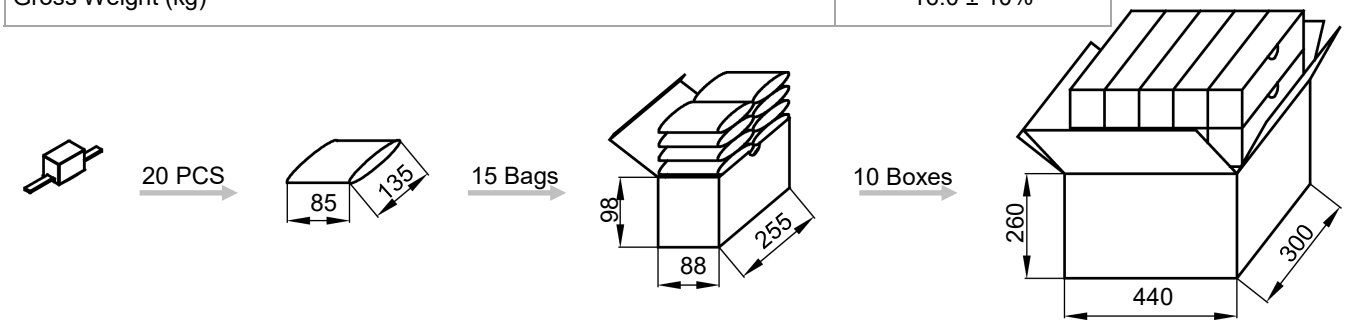

All Rights Reserved by Xiamen SET Electronics Co., Ltd. 2021-2023 V2.3

Product Temp.-Time Curve (For Reference Only)

The Temp.-Time Curve of Thermal-Link in different Temp. oil baths.

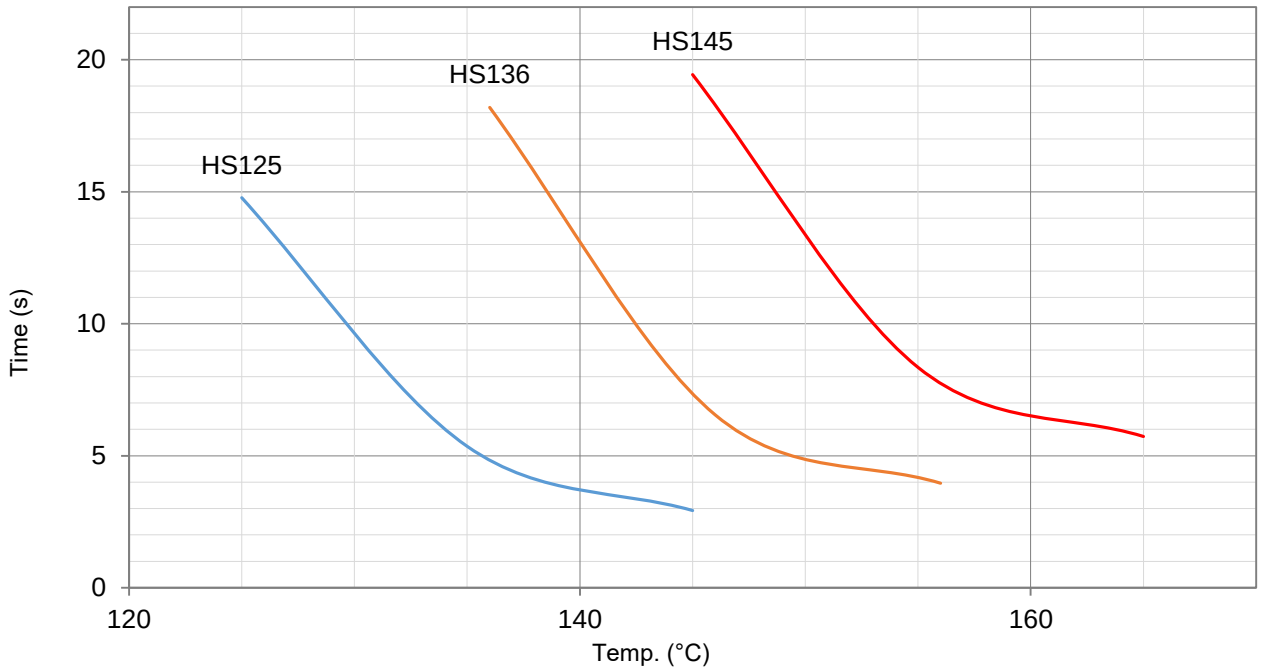

Product Current-Time Curve (For Reference Only)

The Current-Time Curve shows functioning time at multi-times rated current at room temperature 25 ± 2 °C.

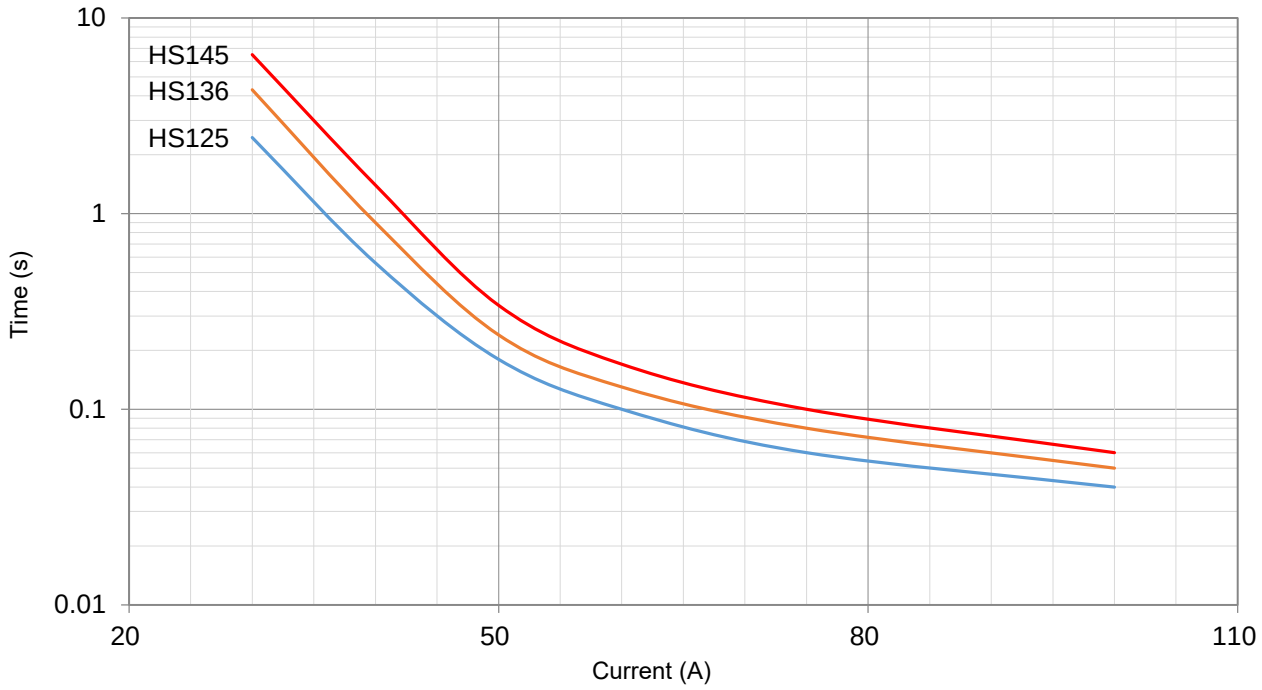

All Rights Reserved by Xiamen SET Electronics Co., Ltd. 2021-2023 V2.3

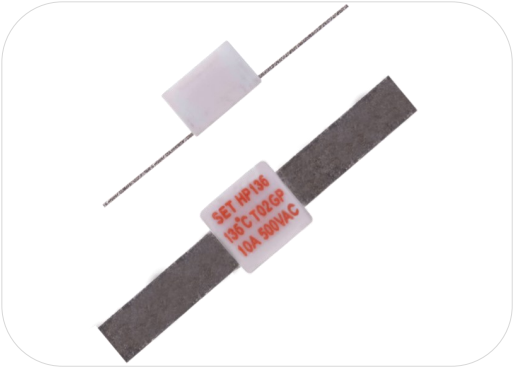

Applications

- Surge Protective Devices
- Batteries
- Automobile Electronic

Features

- High Accuracy of Functioning Temp.
- Non-Resettable
- High Operating Voltage
- RoHS & REACH Compliant

Customization

- Temp.
- The Length of Lead Wires

Agency Approvals

Agency Mark	Standards	No.
	UL 60691	E214712
	CAN-CSA-E60691	E214712
	EN 60691	R50337988
	GB 9816.1	2020980205000177

Dimensions (mm)

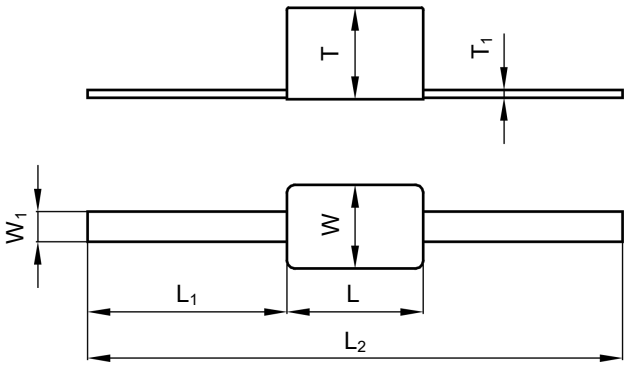

L	L_1	L_2	W	W_1	T	T_1
8.6 ± 1.0	30.0 ± 2.0	70.0 ± 3.0	7.6 ± 1.0	5.0 ± 1.0	6.0 ± 1.0	0.5 ± 0.1

All Rights Reserved by Xiamen SET Electronics Co., Ltd. 2021-2023 V2.3

Specifications

Model	T_f	Fusing Temp.	T_h	T_m	I_r	U_r	UL	cUL	TUV	CCC	RoHS REACH
	(°C)	(°C)	(°C)	(°C)	(A)	(V)					
HP125	125	121 ± 2	90	250	10	AC 500 DC 200	●	●	●	●	●
HP136	136	131 ± 2	106	250	10	AC 500 DC 200	●	●	●	●	●
HP145	145	140 ± 2	112	250	10	AC 500 DC 200	●	●	●	●	●

Note:

"● "Means certificated.

"○ "Means non-certificated.

Packaging Information

Bulk

Item	PE Bag	Box	Carton
Dimensions (mm)	135 × 85	255 × 88 × 98	440 × 300 × 220
Quantity (PCS)	20	300	3000
Gross Weight (kg)			9.0 ± 10%

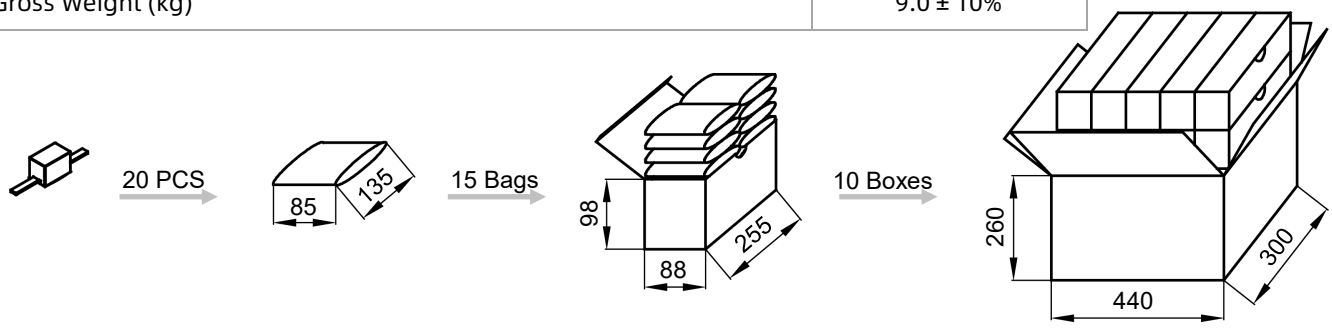

All Rights Reserved by Xiamen SET Electronics Co., Ltd. 2021-2023 V2.3

Product Temp.-Time Curve (For Reference Only)

The Temp.-Time Curve of Thermal-Link in different Temp. oil baths.

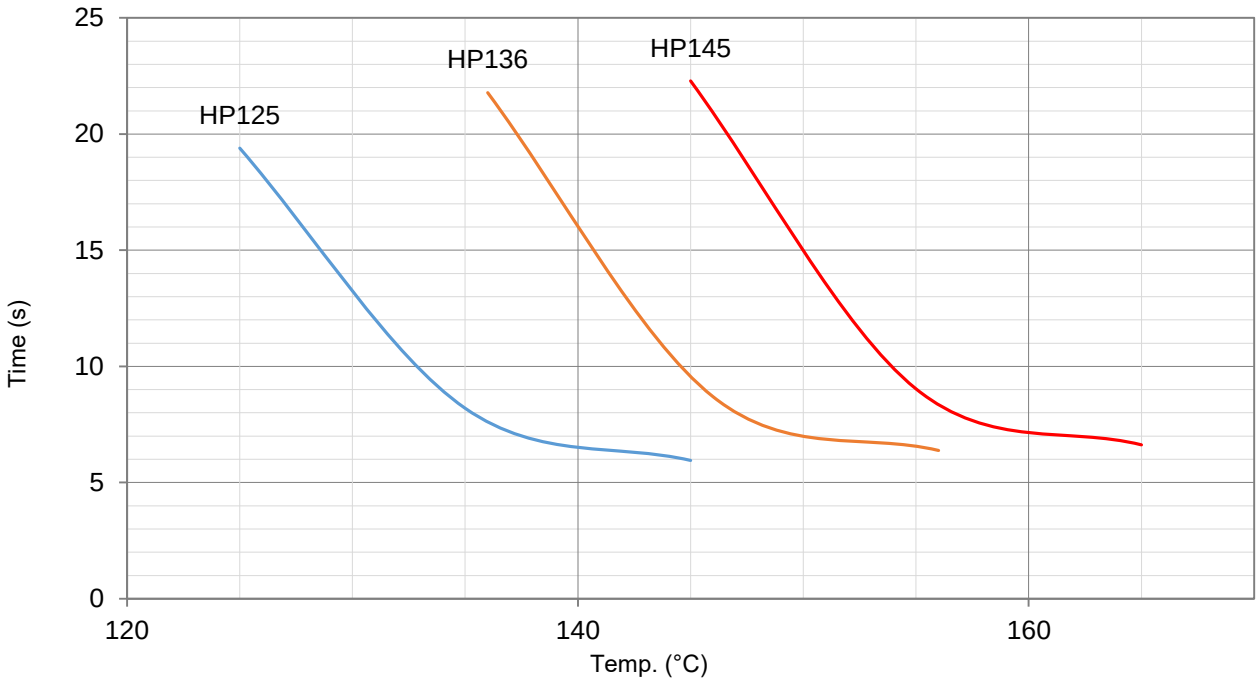

Product Current-Time Curve (For Reference Only)

The Current-Time Curve shows functioning time at multi-times rated current at room temperature 25 ± 2 °C.

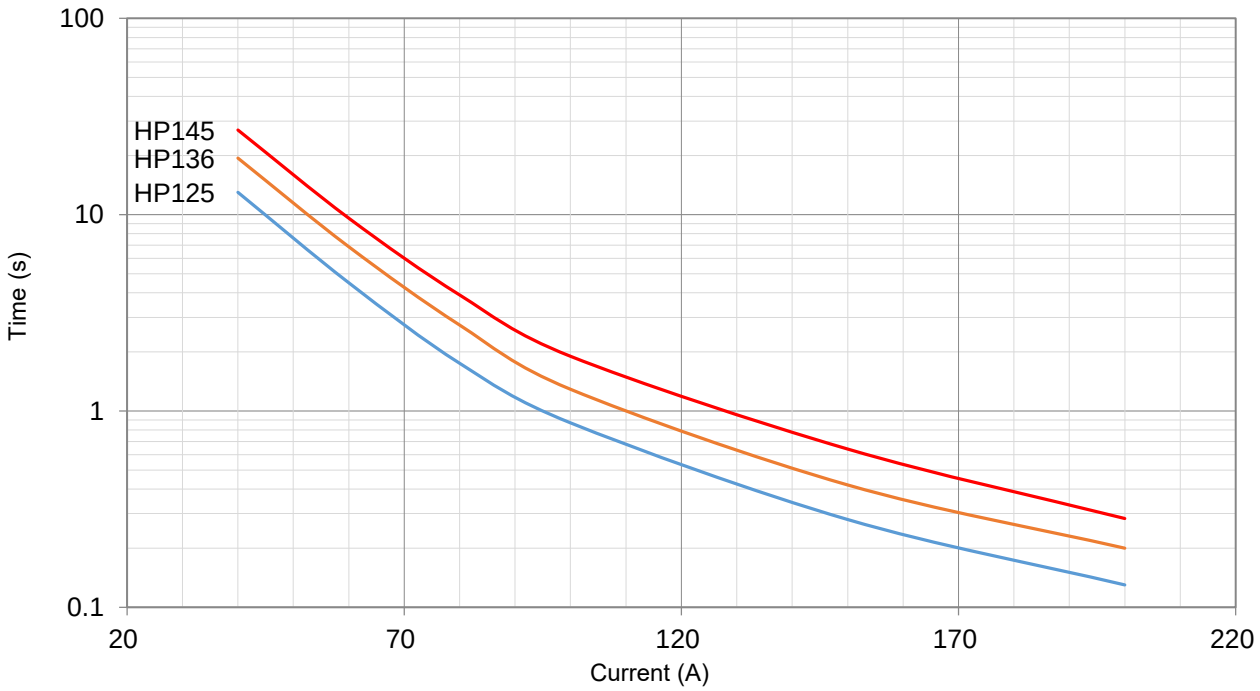

All Rights Reserved by Xiamen SET Electronics Co., Ltd. 2021-2023 V2.3

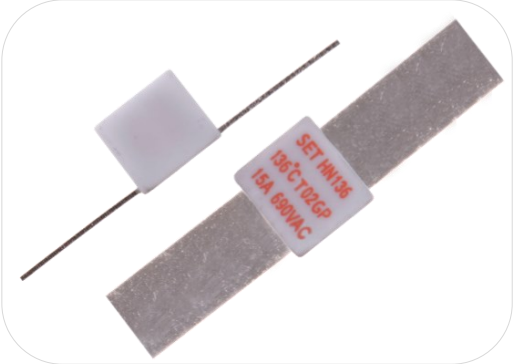

Applications

- Surge Protective Devices
- Batteries
- Automobile Electronic

Features

- High Accuracy of Functioning Temp.
- Non-Resettable
- High Operating Voltage
- RoHS & REACH Compliant

Customization

- Temp.
- The Length of Lead Wires

Agency Approvals

Agency Mark	Standards	No.
	UL 60691	E214712
	CAN-CSA-E60691	E214712
	EN 60691	R50336499
	GB 9816.1	2020980205000176

Dimensions (mm)

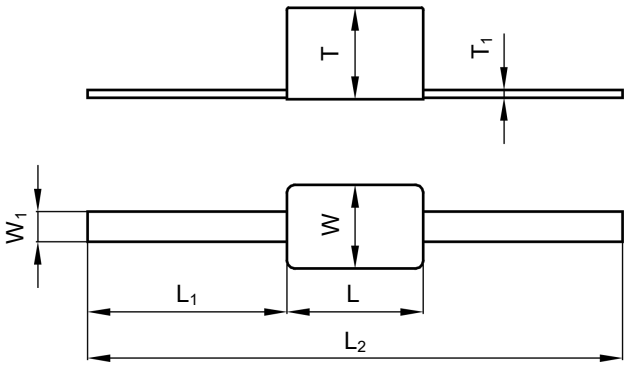

L	L_1	L_2	W	W_1	T	T_1
10.0 ± 1.0	30.0 ± 2.0	70.0 ± 3.0	10.0 ± 1.0	7.6 ± 1.0	7.4 ± 1.0	0.5 ± 0.1

All Rights Reserved by Xiamen SET Electronics Co., Ltd. 2021-2023 V2.3

Specifications

Model	T_f	Fusing Temp.	T_h	T_m	I_r	U_r	UL	cUL	TUV	CCC	RoHS REACH
	(°C)	(°C)	(°C)	(°C)	(A)	(V)					
HN125	125	121 ± 2	90	250	15	AC 690 DC 200	●	●	●	●	●
HN136	136	131 ± 2	106	250	15	AC 690 DC 200	●	●	●	●	●
HN145	145	140 ± 2	115	250	15	AC 690 DC 200	●	●	●	●	●

Note:

"● "Means certificated.

"○ "Means non-certificated.

Packaging Information

Bulk

Item	PE Bag	Box	Carton
Dimensions (mm)	135 × 85	255 × 88 × 98	440 × 300 × 220
Quantity (PCS)	20	300	3000
Gross Weight (kg)			13.0 ± 10%

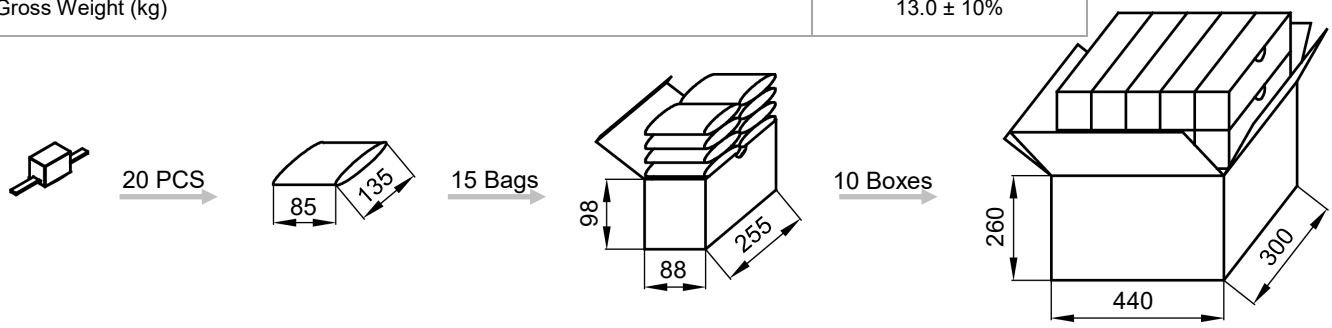

All Rights Reserved by Xiamen SET Electronics Co., Ltd. 2021-2023 V2.3

Product Temp.-Time Curve (For Reference Only)

The Temp.-Time Curve of Thermal-Link in different Temp. oil baths.

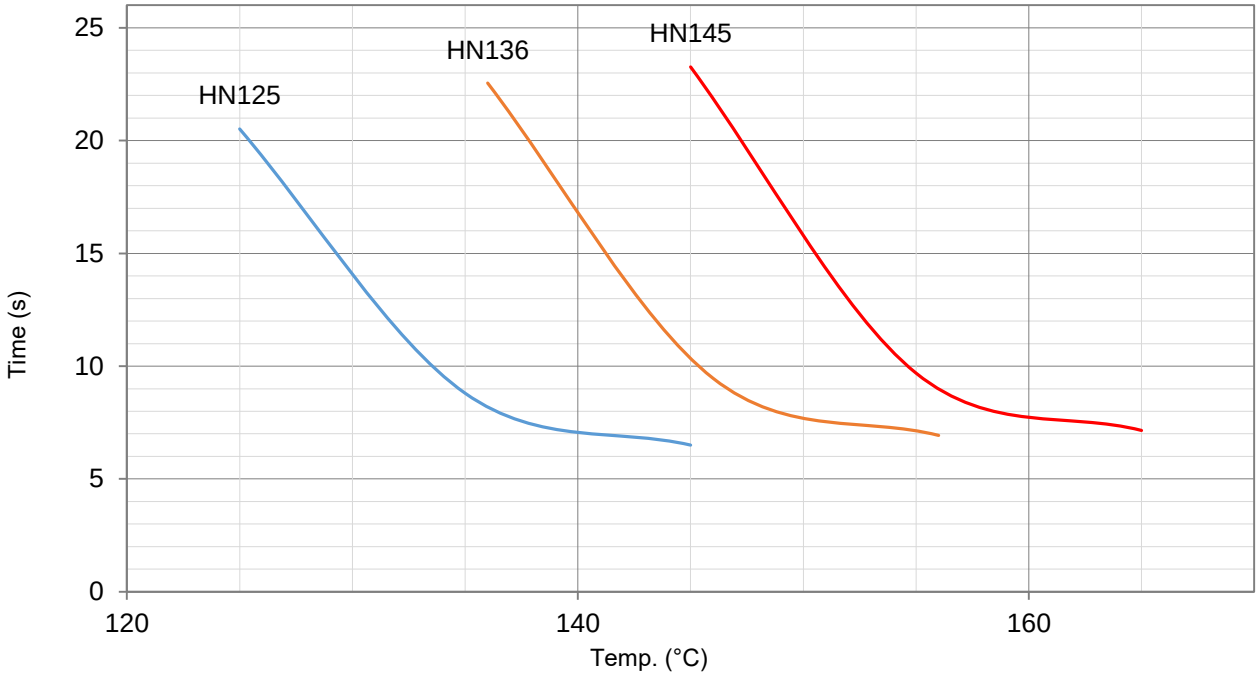

Product Current-Time Curve (For Reference Only)

The Current-Time Curve shows functioning time at multi-times rated current at room temperature 25 ± 2 °C.

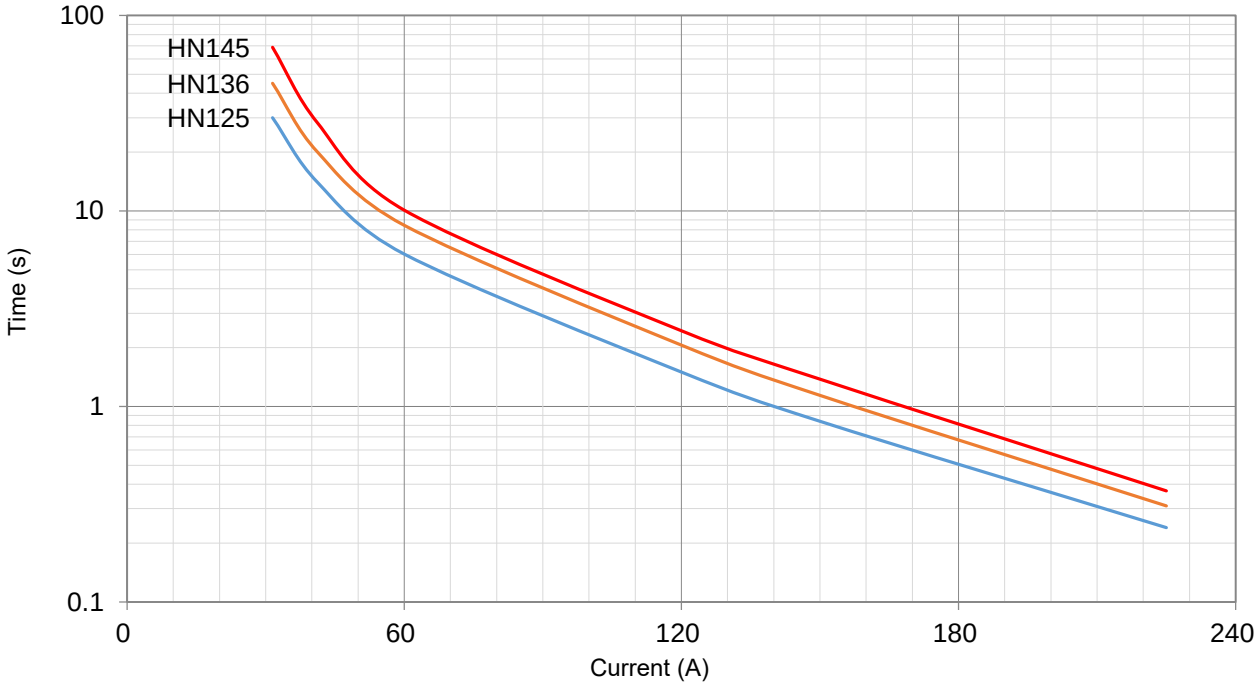

All Rights Reserved by Xiamen SET Electronics Co., Ltd. 2021-2023 V2.3

21

21 YEARS OF DESIGNING, MANUFACTURING AND SELLING OF CIRCUIT PROTECTION COMPONENTS

>40

SOLD TO MORE THAN 40 COUNTRIES AND REGIONS

Automatic

AUTOMATIC PROCESS PRODUCTION

500

A BRAND CHOSEN BY FORTUNE 500 COMPANIES

INNOVATIVE DESIGN
ORIGINAL MANUFACTURING
WORLD-CLASS MANUFACTURING

NO. 8067, 8001 West Xiang'an Road,Torch High-tech industrial District,Xiang'an 361101 Xiamen P.R. China
www.SETsafe.com www.SETfuse.com
Tel:+ 86-592-5715-838 sales@SETfuse.com

SET safe | SET fuse

All Rights Reserved by Xiamen SET Electronics Co., Ltd. 2021-2023