Miniature Fuses

Cartridge Fuse-links (CFL)

SCF625(P) Series, Fast Acting, Ceramic Tube

Dimensions (mm)

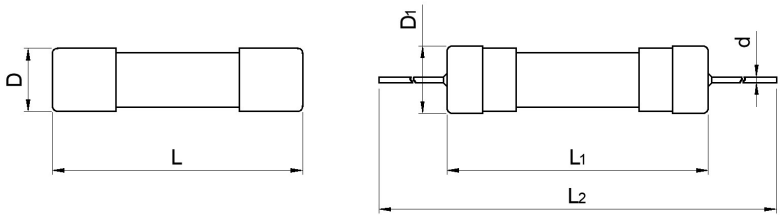

L	L_1	L_2	D	D_1	d
25.4 ± 1.0	26.5 ± 1.0	103 ± 2	Φ6.35 ± 0.20	Φ6.8± 0.30	≤16 A: Φ0.80 ± 0.05 >16 A ~ 30 A: Φ1.00 ± 0.05 >30 A: Φ1.20 ± 0.05

Description

Φ6.35 × 25.4 mm, Fast Acting, high breaking capacity cartridge fuse, designed to UL standards.

Key Features

- Body Size: Φ6.35 × 25.4 mm
- Fast Acting
- High Breaking Capacity
- Ceramic Tube Construction
- Designed To UL 248-14
- Lead-free (Pb-free)
- RoHS and REACH Compliant

Applications

- Power Supply
- Household Appliance
- Surge Protective Device (SPD)
- Power Strips
- Smart Home
- Office Equipment
- Electric Tool
- Medical Equipment
- Instruments and Apparatuses

Structure

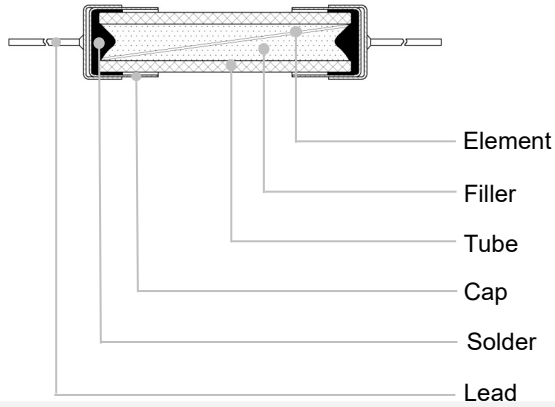

Product Number System

SCF625F10A250V

- Rated Voltage
- Rated Current
- Fast Acting
- Product Series
  - SCF625: Cartridge Type
  - SCF625P: Axial Lead Type

Time/Current Characteristic

% of Ampere Rating	Ampere Rating	Opening Time
100%	5 A ~ 50 A	4 hours, Min.
200%	5 A ~ 50 A	120 seconds, Max.
250%	5 A ~ 50 A	30 seconds, Max.
300%	5 A ~ 50 A	5 seconds, Max.

Agency Approvals

Agency Symbol	The file No. and certification No. obtained by SETsafe|SETfuse	Ampere Range
c UL us	E345932	5 A ~ 50 A

All Rights Reserved by Xiamen SET Electronics Co., Ltd. 2024-2026 V1.0

Specifications

Series	Rated Current (A)	Rated Breaking Capacity	Average Typical Melting I^2t [a] (A²sec)	Agency Approvals cURus	Environmental RoHS	Environmental REACH
SCF625(P)	5	10 kA @ 250 VAC 2000 A @ 400 VDC 2500 A @ 75 VDC	50	●	●	●
SCF625(P)	6		48	●	●	●
SCF625(P)	6.3		59	●	●	●
SCF625(P)	8		100	●	●	●
SCF625(P)	10		160	●	●	●
SCF625(P)	12		270	●	●	●
SCF625(P)	12.5		290	●	●	●
SCF625(P)	15		460	●	●	●
SCF625(P)	16		660	●	●	●
SCF625(P)	20		1050	●	●	●
SCF625(P)	25	300 A @ 400 VDC 2500 A @ 75 VDC	2200	●	●	●
SCF625(P)	30		3700	●	●	●
SCF625(P)	40	2500 A @ 75 VDC	5600	●	●	●
SCF625(P)	50		5000	●	●	●

Remark:

a: I^2t value is measured at 10 I_N.

RoHS and REACH Compliant.

All Rights Reserved by Xiamen SET Electronics Co., Ltd. 2024-2026 V1.0

Time Current Curve (For Reference Only)

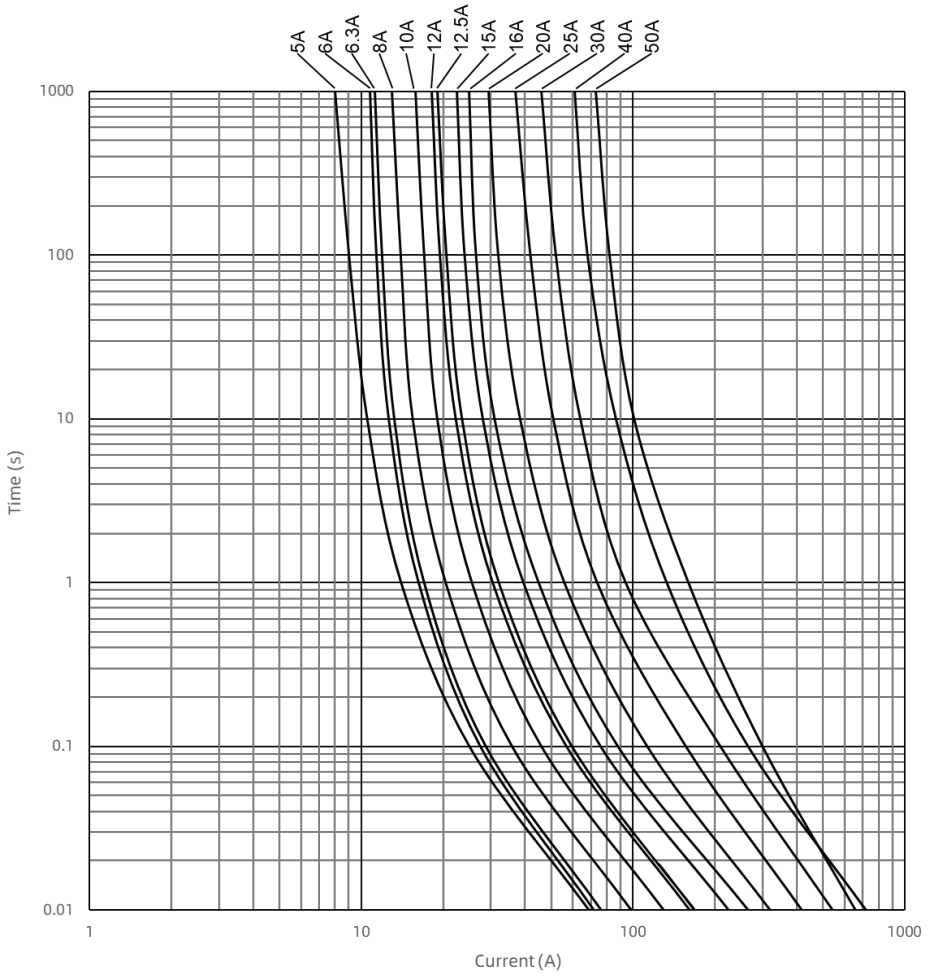

Rated Current Derating Curve（For Reference Only）

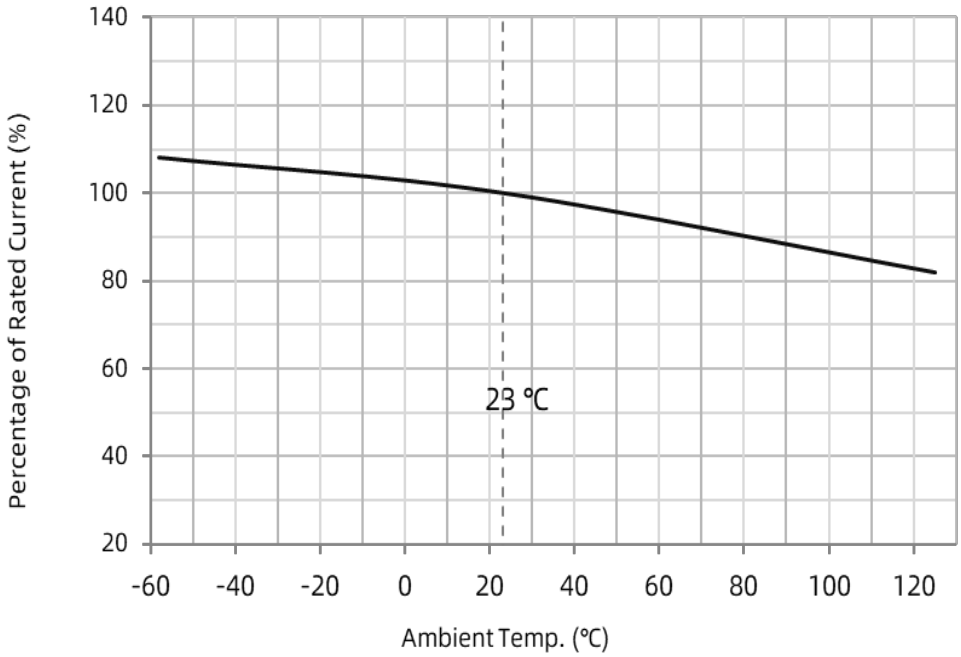

All Rights Reserved by Xiamen SET Electronics Co., Ltd. 2024-2026 V1.0

Packaging Information

Dimensions (mm)

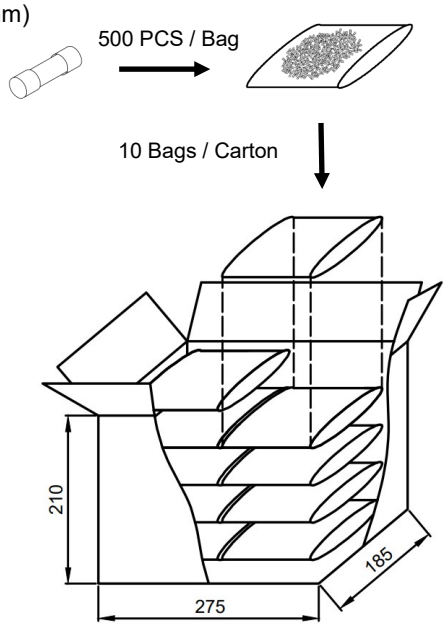

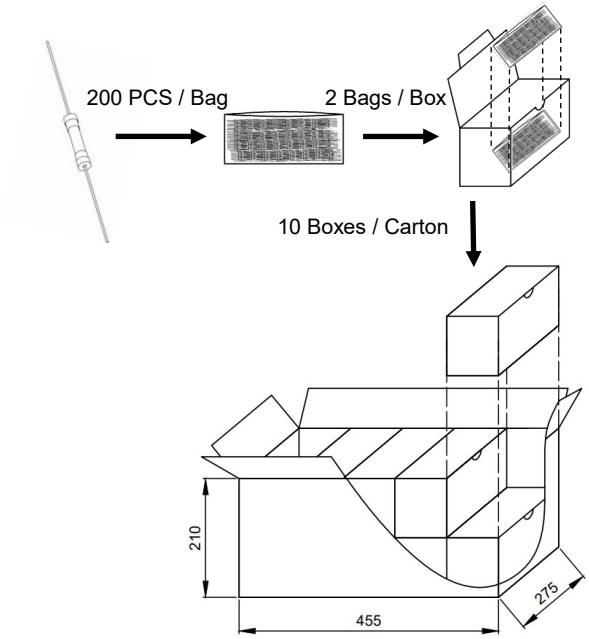

Cartridge Type		
Item	**PE Bag**	**Carton**
Q'ty (PCS)	500	5,000
Gross Weight (kg)	13.5×(1±10%)	

Axial Lead Type			
Item	**PE Bag**	**Box**	**Carton**
Q'ty (PCS)	200	400	4,000
Gross Weight (kg)	15.5×(1±10%)		

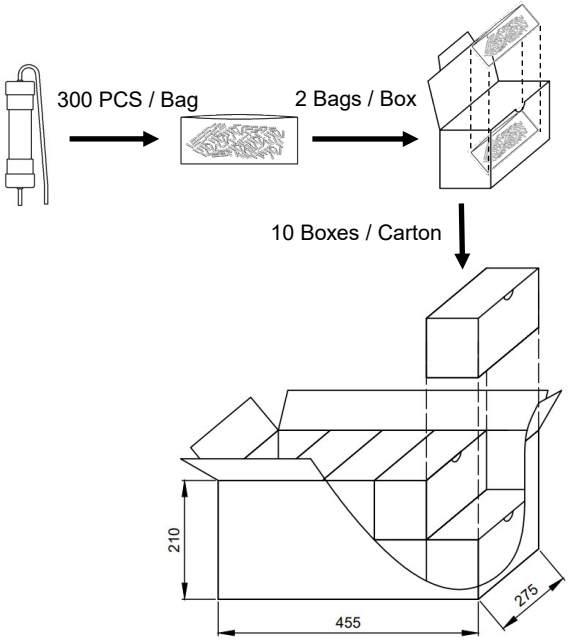

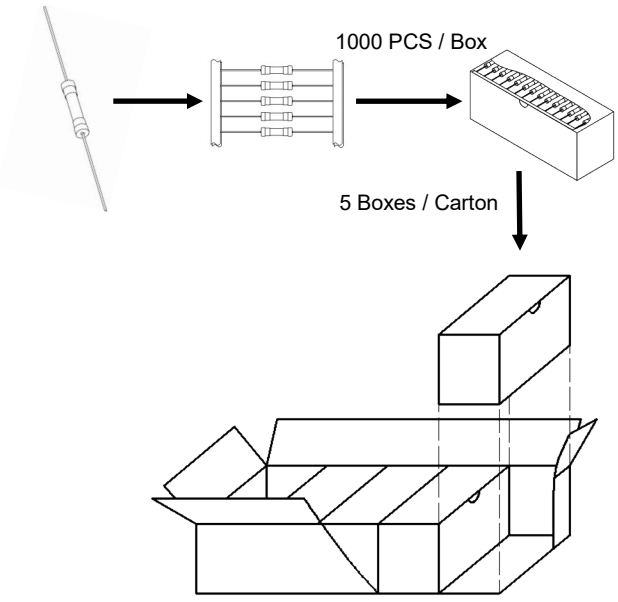

Bending Molding Type (Vertical or Horizontal)			
Item	**PE Bag**	**Box**	**Carton**
Q'ty (PCS)	300	600	6,000
Gross Weight (kg)	21×(1±10%)		

Taping Type		
Item	**Box**	**Carton**
Q'ty (PCS)	1,000	5,000
Gross Weight (kg)	18.5×(1±10%)	

All Rights Reserved by Xiamen SET Electronics Co., Ltd. 2024-2026 V1.0

ATTENTION

Inspection

Cold Resistance Test

a. Applied current shall be less than 10% of rated current, at ambient Temp. of (23±2) °C.

b. 4-Wire Resistance Measurement.

Usage

a. Do not touch the fuse body or lead wire when power on, avoiding scald or electric shock.

b. The air pressure is 80 kPa to 106 kPa, corresponding to the altitude of +2000 m to -500 m.

Replacement

For safety reasons, the Fuse is a non-resettable product, please ensure that the alternative Fuse is the same type when replace it.

Storage

Fuse storage should avoid high temperature, high humidity, direct sunlight, and corrosive gases, so as not to affect the solderability of the lead wire. Please use them up within 1 year after receiving the goods.

Installation

Do not apply mechanical stress to the fuse body during or after the installation.

Installation Position

Do not install the fuse on an assembly that may often subject to severe continuous vibration or with corrosive gases (NH_3, SO_2, Cl_2 etc.).

All Rights Reserved by Xiamen SET Electronics Co., Ltd. 2024-2026 V1.0

Soldering Parameters

Wave soldering Parameters (For Reference Only)

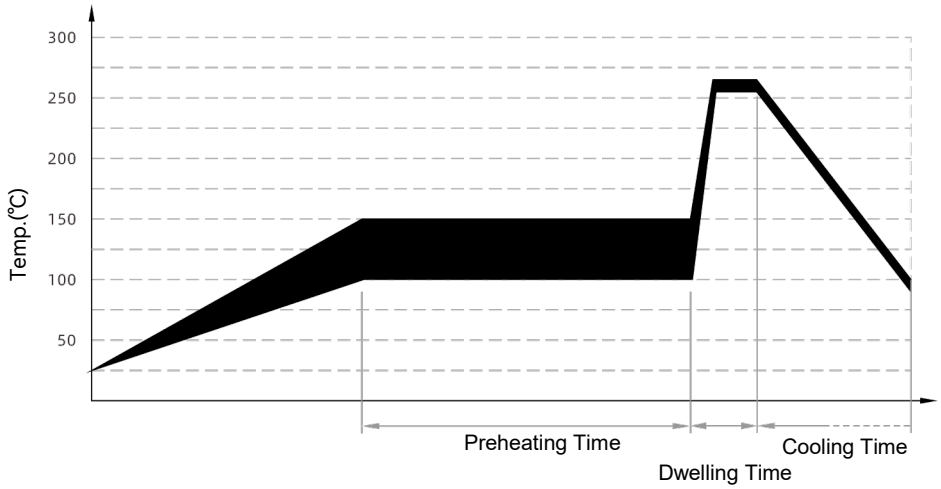

Item	Temp. (°C)	Time (second)
Preheating	100 ~ 150	60 ~ 180
Dwelling	255 ~ 265	4 ~ 8

Recommended Soldering Parameters

Solder Iron Temp.: (350 ± 5) ℃

Soldering Time: 5 seconds, Max.

Lead Wire Bending

If the lead wire has to be bent, please pay attention to the distance between body and the bending point. Refer to the following table.

Axial Type			
d	≤ Φ 1.0 mm	> Φ 1.0 mm	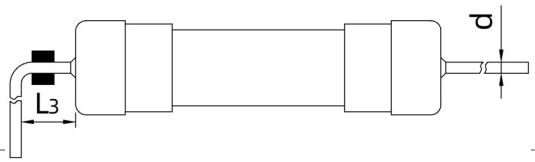
L_3	≥ 3 mm	≥ 5 mm	

All Rights Reserved by Xiamen SET Electronics Co., Ltd. 2024-2026 V1.0

Glossary

Item	Description
Fuse	A device, by the fusing of one or more of its specially designed and proportioned components, opens the circuit in which it is inserted by breaking the current when this exceeds a given value for a sufficient time. —(IEC 60127)
Rated Current	The rated current of a fuse identifies its current-carrying capacity based on a controllable set of test conditions. Each fuse is marked with its rated current, this rating can be identified with a numeric, alpha, or color code mark. —(IEC 60127)
Rated Voltage	A Max. open circuit voltage in which a fuse can be used, yet safely interrupt an overcurrent. Exceeding the voltage rating of a fuse impairs its ability to clear an overload or short circuit safely. —(IEC 60127)
Ampere Squared Seconds I^2t	The melting, arcing, or clearing integral of a fuse, termed I^2t, is the thermal energy required to melt, arc, or clear a specific current. It can be expressed as melting I^2t, arcing I^2t or the sum of them, clearing I^2t. —(IEC 60127)
Overload	Can be classified as an overcurrent which exceeds the normal full load current of a circuit by 2 to 5 times its magnitude and stays within the normal current path. —(UL 248)
Overcurrent	A condition which exists in an electrical circuit when the normal load current is exceeded. Overcurrent take on two separate characteristics-overloads and short circuits. —(UL 248)
Short Circuit	An overcurrent that leaves the normal current path and greatly exceeds the normal full load current of the circuit by a factor of tens, hundreds, or thousands times. —(UL 248)
Breaking Capacity of a Fuse-link	Value (r.m.s. for AC) of prospective current that a fuse-link is capable of breaking at a stated voltage under prescribed conditions of use and behaviour. —(IEC 60127)

All Rights Reserved by Xiamen SET Electronics Co., Ltd. 2024-2026 V1.0

Reliability Test

No.	Items	Inspection Standards	Standards
1	High Temp. Test	Test Condition: Temperature: (105 ± 2) °C Time: 1000 hours Test Requirement: After the test, the voltage drop shall not have changed by more than 10% of the value measured before the test. The clearing time of the fuse shall be in range.	MIL-STD-202(Test Method 108) GJB360B(Test Method 108)
2	High Humidity Test	Test Condition: Temperature: (40 ± 2) °C Humidity: 90% to 95% Time: 96 hours Test Requirement: After the test, the voltage drop shall not have changed by more than 10 % of the value measured before the test. The clearing time of the fuse shall be in range.	MIL-STD-202(Test Method 103) GJB360B(Test Method 103)
3	Thermal Shock Test	Test Condition: Per Cycle: -55 °C / 30 minutes, 125 °C / 30 minutes Time: 100 Cycles Test Requirement: After the test, the voltage drop shall not have changed by more than 10 % of the value measured before the test. The clearing time of the fuse shall be in range.	MIL-STD-202(Test Method 107) GJB360B(Test Method 107)

All Rights Reserved by Xiamen SET Electronics Co., Ltd. 2024-2026 V1.0

Cartridge Fuse-links (CFL) Features & Model List Overview

额定电流 Rated Current I_n (A) \ Model				
50.00	○	○	○	○
40.00	○	○	○	○
30.00	SCF632A30A	SCF632AP30A	SCF63230A	SCF632P30A
25.00	SCF632A25A	SCF632AP25A	SCF63225A	SCF632P25A
21.00	○	○	SCF63221A	SCF632P21A
20.00	SCF632A20A	SCF632AP20A	SCF63220A	SCF632P20A
16.00	SCF632A16A	SCF632AP16A	SCF63216A	SCF632P16A
15.00	SCF632A15A	SCF632AP15A	SCF63215A	SCF632P15A
13.00	○	○	○	○
12.50	○	○	SCF63212.5A	SCF632P12.5A
12.00	○	○	SCF63212A	SCF632P12A
10.00	○	○	SCF63210A	SCF632P10A
8.00	○	○	SCF6328A	SCF632P8A
7.00	○	○	○	○
6.30	○	○	SCF6326.3A	SCF632P6.3A
6.00	○	○	SCF6326A	SCF632P6A
5.00	○	○	SCF6325A	SCF632P5A
4.00	○	○	SCF6324A	SCF632P4A
3.15	○	○	SCF6323.15A	SCF632P3.15A
3.00	○	○	○	○
2.50	○	○	SCF6322.5A	SCF632P2.5A
2.00	○	○	SCF6322A	SCF632P2A
1.60	○	○	SCF6321.6A	SCF632P1.6A
1.25	○	○	SCF6321.25A	SCF632P1.25A
1.00	○	○	SCF6321A	SCF632P1A
0.80	○	○	○	○
0.63	○	○	○	○
0.50	○	○	○	○
0.40	○	○	○	○
0.315	○	○	○	○
0.25	○	○	○	○
0.20	○	○	○	○
0.16	○	○	○	○
0.125	○	○	○	○
0.10	○	○	○	○

Remark: Please refer to each product series specification page for complete models

U_r Rated Voltage (VAC) (VDC)	(250 ~ 500) VAC (250 ~ 600) VDC	(250 ~ 600) VAC (250 ~ 600) VDC
Time Feature	/	/
Tube Material	Ceramic	
Standards	IEC / UL	
Breaking Capacity	10 kA ~ 30 kA	1000 A ~ 50 kA
Physical Size (mm)	Φ6.35 × 31.8	
Product Structure		

All Rights Reserved by Xiamen SET Electronics Co., Ltd. 2024-2026 V1.0

Cartridge Fuse-links (CFL) Features & Model List Overview

Rated Current I_n (A)					
50.00	SCF625F50A	SCF625PF50A	○	○	○
40.00	SCF625F40A	SCF625PF40A	○	○	○
30.00	SCF625F30A	SCF625PF30A	○	○	○
25.00	SCF625F25A	SCF625PF25A	○	○	○
21.00	○	○	○	○	○
20.00	SCF625F20A	SCF625PF20A	○	SGF520-20A (-L)	SGT520-20A (-L)
16.00	SCF625F16A	SCF625PF16A	○	SGF520-16A (-L)	SGT520-16A (-L)
15.00	SCF625F15A	SCF625PF15A	○	SGF520-15A (-L)	SGT520-15A (-L)
13.00	○	○	SC625FM13A	○	○
12.50	SCF625F12.5A	SCF625PF12.5A	○	SGF520-12.5A (-L)	SGT520-12.5A (-L)
12.00	SCF625F12A	SCF625PF12A	○	SGF520-12A (-L)	SGT520-12A (-L)
10.00	SCF625F10A	SCF625PF10A	SC625FM10A	SGF520-10A (-L)	SGT520-10A (-L)
8.00	SCF625F8A	SCF625PF8A	○	SGF520-8A (-L)	SGT520-8A (-L)
7.00	○	○	SC625FM7A	○	○
6.30	SCF625F6.3A	SCF625PF6.3A	○	SGF520-6.3A (-L)	SGT520-6.3A (-L)
6.00	SCF625F6A	SCF632PF6A	○	○	○
5.00	SCF625F5A	SCF625PF5A	SC625FM5A	SGF520-5A (-L)	SGT520-5A (-L)
4.00	○	○	○	SGF520-4A (-L)	SGT520-4A (-L)
3.15	○	○	○	SGF520-3.15A (-L)	SGT520-3.15A (-L)
3.00	○	○	SC625FM3A	○	○
2.50	○	○	○	SGF520-2.5A (-L)	SGT520-2.5A (-L)
2.00	○	○	○	SGF520-2A (-L)	SGT520-2A (-L)
1.60	○	○	○	SGF520-1.6A (-L)	SGT520-1.6A (-L)
1.25	○	○	○	SGF5201.25A (-L)	SGT520-1.25A (-L)
1.00	○	○	○	SGF520-1A (-L)	SGT520-1A (-L)
0.80	○	○	○	SGF520-800mA (-L)	SGT520-800mA (-L)
0.63	○	○	○	SGF520-630mA (-L)	SGT520-630mA (-L)
0.50	○	○	○	SGF520-500mA (-L)	SGT520-500mA (-L)
0.40	○	○	○	○	○
0.315	○	○	○	○	○
0.25	○	○	○	○	○
0.20	○	○	○	○	○
0.16	○	○	○	○	○
0.125	○	○	○	○	○
0.10	○	○	○	○	○
U_r Rated Voltage (VAC) (VDC)	250 VAC (75 ~ 400) VDC		264 VAC	250 VAC	
Time Feature	Fast Acting		Medium-Acting	Fast Acting	Time-Lag
Tube Material	Ceramic		Ceramic	Glass	
Standards	UL		IEC / BS	IEC / UL	
Breaking Capacity	300 A ~ 10 kA		6 kA	35 A ~ 200 A	
Physical Size (mm)	Φ6.35 × 25.4		Φ6.35 × 25.4	Φ5 × 20	
Product Structure	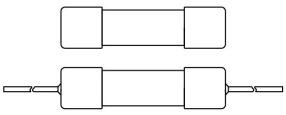		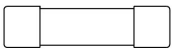	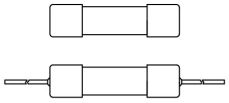	

Model

Remark: Please refer to each product series specification page for complete models

All Rights Reserved by Xiamen SET Electronics Co., Ltd. 2024-2026 V1.0

Cartridge Fuse-links (CFL) Features & Model List Overview

Rated Current I_n (A)				
50.00	○	○	○	○
40.00	○	○	○	○
30.00	○	○	SCT520T30A	SCT520PT30A
25.00	SCF520F25A	SCF520PF25A	SCT520T25A	SCT520PT25A
21.00	○	○	○	○
20.00	SCF520F20A	SCF520PF20A	SCT520T20A	SCT520PT20A
16.00	SCF520F16A	SCF520PF16A	SCT520T16A	SCT520PT16A
15.00	SCF520F15A	SCF520PF15A	SCT520T15A	SCT520PT15A
13.00	○	○	○	○
12.50	SCF520F12.5A	SCF520PF12.5A	SCT520T12.5A	SCT520PT12.5A
12.00	SCF520F12A	SCF520PF12A	SCT520T12A	SCT520PT12A
10.00	SCF520F10A	SCF520PF10A	SCT520T10A	SCT520PT10A
8.00	SCF520F8A	SCF520PF8A	SCT520T8A	SCT520PT8A
7.00	○	○	○	○
6.30	SCF520F6.3A	SCF520PF6.3A	SCT520T6.3A	SCT520PT6.3A
6.00	○	○	○	○
5.00	SCF520F5A	SCF520PF5A	SCT520T5A	SCT520PT5A
4.00	SCF520F4A	SCF520PF4A	SCT520T4A	SCT520PT4A
3.15	SCF520F3.15A	SCF520PF3.15A	SCT520T3.15A	SCT520PT3.15A
3.00	SCF520F3A	SCF520PF3A	SCT520T3A	SCT520PT3A
2.50	SCF520F2.5A	SCF520PF2.5A	SCT520T2.5A	SCT520PT2.5A
2.00	SCF520F2A	SCF520PF2A	SCT520T2A	SCT520PT2A
1.60	SCF520F1.6A	SCF520PF1.6A	SCT520T1.6A	SCT520PT1.6A
1.25	SCF520F1.25A	SCF520PF1.25A	SCT520T1.25A	SCT520PT1.25A
1.00	SCF520F1A	SCF520PF1A	SCT520T1A	SCT520PT1A
0.80	SCF520F800mA	SCF520PF800mA	SCT520T800mA	SCT520PT800mA
0.63	SCF520F630mA	SCF520PF630mA	SCT520T630mA	SCT520PT630mA
0.50	SCF520F500mA	SCF520PF500mA	SCT520T500mA	SCT520PT500mA
0.40	SCF520F400mA	SCF520PF400mA	SCT520T400mA	SCT520PT400mA
0.315	○	○	○	○
0.25	○	○	○	○
0.20	○	○	○	○
0.16	○	○	○	○
0.125	○	○	○	○
0.10	○	○	○	○
U_r Rated Voltage (VAC) (VDC)	(125 ~ 600) VAC (125 ~ 600) VDC		(125 ~ 500) VAC (125 ~ 500) VDC	
Time Feature	Fast Acting		Time-Lag	
Tube Material	Ceramic			
Standards	IEC / UL			
Breaking Capacity	200 A ~ 5 kA		200 A ~ 10 kA	
Physical Size (mm)	Φ5 × 20			
Product Structure				

Model

Remark: Please refer to each product series specification page for complete models

All Rights Reserved by Xiamen SET Electronics Co., Ltd. 2024-2026 V1.0

Sub-miniature Fuse-links (SFL) Feature & Model List Overview

Rated Current I_n (A)	Model	
50.00	○	○
40.00	○	○
30.00	○	○
25.00	○	○
21.00	○	○
20.00	○	SPT478T20A
16.00	○	SPT478T16A
15.00	○	SPT478T15A
13.00	○	○
12.50	○	SPT478T12.5A
12.00	○	○
10.00	SPF478F10A	SPT478T10A
8.00	SPF478F8A	SPT478T8A
7.00	○	○
6.30	SPF478F6.3A	SPT478T6.3A
6.00	○	○
5.00	SPF478F5A	SPT478T5A
4.00	SPF478F4A	SPT478T4A
3.15	SPF478F3.15A	SPT478T3.15A
3.00	○	○
2.50	SPF478F2.5A	SPT478T2.5A
2.00	SPF478F2A	SPT478T2A
1.60	SPF478F1.6A	SPT478T1.6A
1.25	SPF478F1.25A	SPT478T1.25A
1.00	SPF478F1A	SPT478T1A
0.80	○	SPT478T800mA
0.63	○	SPT478T630mA
0.50	○	SPT478T500mA
0.40	○	SPT478T400mA
0.315	○	SPT478T315mA
0.25	○	SPT478T250mA
0.20	○	SPT478T200mA
0.16	○	SPT478T160mA
0.125	○	SPT478T125mA
0.10	○	SPT478T100mA
U_r Rated Voltage (VAC) (VDC)	(125 ~ 400) VAC	
Time Feature	Fast Acting	Time-Lag
Tube Material	Plastic Case	
Standards	IEC / UL	
Breaking Capacity	35 A ~ 200 A	
Physical Size (mm)	4 × 7 × 8	
Product Structure	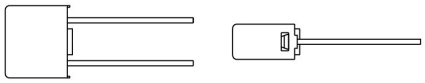	

Remark: Please refer to each product series specification page for complete models

All Rights Reserved by Xiamen SET Electronics Co., Ltd. 2024-2026 V1.0

Surface Mount Fuse-lingks (SMFL) Feature & Model List Overview

Rated Current I_n (A)				
50.00	○	○	○	○
40.00	○	○	SCF1032F40A	○
30.00	○	○	SCF1032F30A	○
25.00	○	○	SCF1032F25A	○
21.00	○	○	○	○
20.00	SCF6125F20A	○	SCF1032F20A	○
16.00	SCF6125F16A	○	SCF1032F16A	○
15.00	SCF6125F15A	○	SCF1032F15A	SCT1032T15A
13.00	○	○	○	○
12.50	SCF6125F12.5A	SCT6125T12.5A	SCF1032F12.5A	SCT1032T12.5A
12.00	SCF6125F12A	SCT6125T12A	SCF1032F12A	SCT1032T12A
10.00	SCF6125F10A	SCT6125T10A	SCF1032F10A	SCT1032T10A
8.00	SCF6125F8A	SCT6125T8A	SCF1032F8A	SCT1032T8A
7.00	○	○	○	○
6.30	SCF6125F6.3A	SCT6125T6.3A	SCF1032F6.3A	SCT1032T6.3A
6.00	○	○	○	○
5.00	SCF6125F5A	SCT6125T5A	SCF1032F5A	SCT1032T5A
4.00	SCF6125F4A	SCT6125T4A	SCF1032F4A	SCT1032T4A
3.15	SCF6125F3.15A	SCT6125T3.15A	SCF1032F3.15A	SCT1032T3.15A
3.00	SCF6125F3A	SCT6125T3A	SCF1032F3A	SCT1032T3A
2.50	SCF6125F2.5A	SCT6125T2.5A	SCF1032F2.5A	SCT1032T2.5A
2.00	SCF6125F2A	SCT6125T2A	SCF1032F2A	SCT1032T2A
1.60	SCF6125F1.6A	SCT6125T1.6A	SCF1032F1.6A	SCT1032T1.6A
1.25	○	SCT6125T1.25A	SCF1032F1.25A	SCT1032T1.25A
1.00	○	SCT6125T1A	SCF1032F1A	SCT1032T1A
0.80	○	SCT6125T800mA	○	SCT1032T800mA
0.63	○	SCT6125T630mA	○	SCT1032T630mA
0.50	○	SCT6125T500mA	○	SCT1032T500mA
0.40	○	SCT6125T400mA	○	SCT1032T400mA
0.315	○	SCT6125T315mA	○	SCT1032T315mA
0.25	○	SCT6125T250mA	○	SCT1032T250mA
0.20	○	SCT6125T200mA	○	SCT1032T200mA
0.16	○	○	○	SCT1032T160mA
0.125	○	○	○	SCT1032T125mA
0.10	○	○	○	SCT1032T100mA
U_r Rated Voltage (VAC) (VDC)	(125 ~ 350) VAC (24 ~ 125) VDC		(125 ~ 350) VAC (32 ~ 250) VDC	
Time Feature	Fast Acting	Time-Lag	Fast Acting	Time-Lag
Tube Material	Ceramic			
Standards	IEC / UL			
Breaking Capacity	50 A ~ 500 A		100 A ~ 1000 A	
Physical Size (mm)	2.7 × 2.7 × 6.3		3.2 × 3.2 × 10.3	
Product Structure	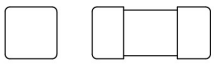		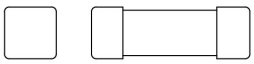	

Model

Remark: Please refer to each product series specification page for complete models

All Rights Reserved by Xiamen SET Electronics Co., Ltd. 2024-2026 V1.0