Miniature Fuses

- Ceramic Tube, Glass Tube, Plastic Case
- Fast Acting and Time-Lag
- Rated Current: (0.1 ~ 50) A
- Rated Voltage: (125 ~ 600) VAC, (24 ~ 600) VDC
- Low and High Breaking Capacity
- Lead-free (Pb-free), RoHS & REACH Compliant

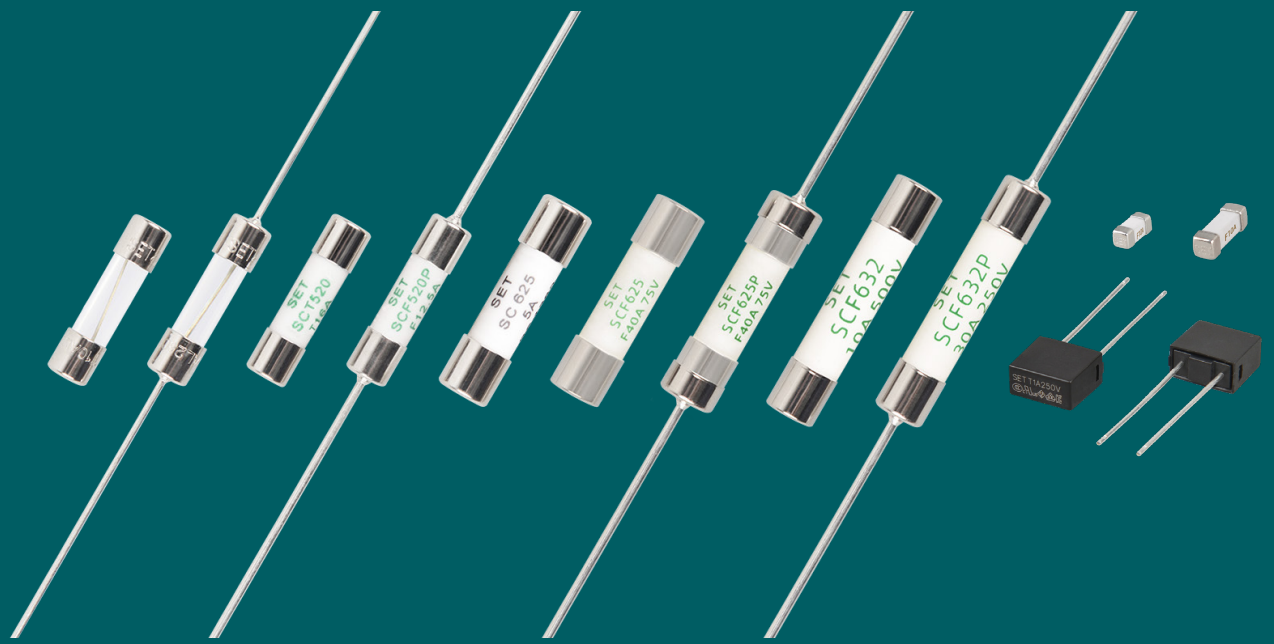

SET safe | SET fuse

Providing a Total Solution for High Standard Safety Circuit Protection

Miniature Fuses
(Cartridge Fuse-links)

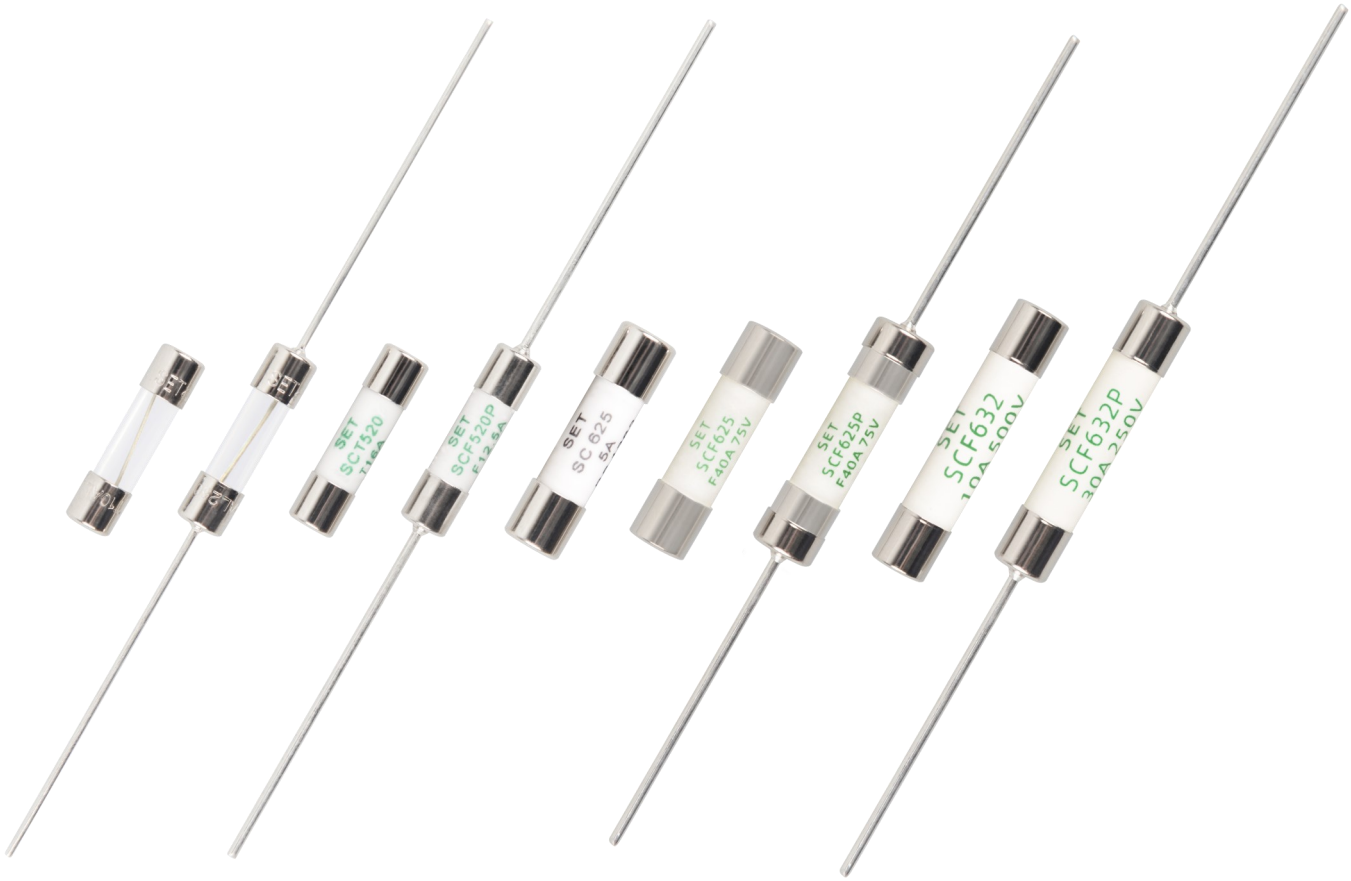

Features

Ceramic Tube, Glass Tube

Fast Acting and Time-Lag

Rated Current: (0.4 to 50) A

Rated Voltage: (125 to 600) VAC

(75 to 600) VDC

Low and High Breaking Capacity

Lead-free (Pb-free), RoHS & REACH Compliant

All Rights Reserved by Xiamen SET Electronics Co., Ltd. 2021-2023 V2.2

Miniature Fuses
(Cartridge Fuse-links)

Cartridge Fuse-links (CFL) Features & Model List Overview

Rated Current (A)	9	9	12	12
50.00	○	○	SCF625F50A	SSCF625PF50A
40.00	○	○	SCF625F40A	SCF625PF40A
30.00	SCF63230A	SCF632P30A	SCF625F30A	SCF625PF30A
25.00	SCF63225A	SCF632P25A	SCF625F25A	SCF625PF25A
21.00	SCF63221A	SCF632P21A	○	○
20.00	SCF63220A	SCF632P20A	SCF625F20A	SCF625PF20A
16.00	SCF63216A	SCF632P16A	SCF625F16A	SCF625PF16A
15.00	SCF63215A	SCF632P15A	SCF625F15A	SCF625PF15A
13.00	○	○	○	○
12.50	SCF63212.5A	SCF632P12.5A	SCF625F12.5A	SCF625PF12.5A
12.00	SCF63212A	SCF632P12A	SCF625F12A	SCF625PF12A
10.00	SCF63210A	SCF632P10A	SCF625F10A	SCF625PF10A
8.00	SCF6328A	SCF632P8A	SCF625F8A	SCF625PF8A
7.00	○	○	○	○
6.30	SCF6326.3A	SCF632P6.3A	SCF625F6.3A	SCF625PF6.3A
6.00	SCF6326A	SCF632P6A	SCF625F6A	SCF632PF6A
5.00	SCF6325A	SCF632P5A	SCF625F5A	SCF625PF5A
4.00	SCF6324A	SCF632P4A	○	○
3.15	SCF6323.15A	SCF632P3.15A	○	○
3.00	○	○	○	○
2.50	SCF6322.5A	SCF632P2.5A	○	○
2.00	SCF6322A	SCF632P2A	○	○
1.60	SCF6321.6A	SCF632P1.6A	○	○
1.25	SCF6321.25A	SCF632P1.25A	○	○
1.00	SCF6321A	SCF632P1A	○	○
0.80	○	○	○	○
0.63	○	○	○	○
0.50	○	○	○	○
0.40	○	○	○	○
0.315	○	○	○	○
0.25	○	○	○	○
0.20	○	○	○	○
0.16	○	○	○	○
0.125	○	○	○	○
0.10	○	○	○	○

Page

Model

$U_{r(VAC)(VDC)}$ Rated Voltage	(250 ~ 600) VAC / VDC	250 VAC / (75 ~ 400) VDC
Time Feature	/	Fast Acting
Tube Material	Ceramic	
Standards	UL	
Breaking Capacity	1500 A ~ 50 kA High	300 A ~ 10 kA High
Physical Size (mm)	Φ6.35 × 31.8	Φ6.35 × 25.4
Product Structure	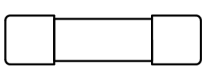	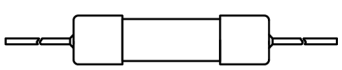

Miniature Fuses

All Rights Reserved by Xiamen SET Electronics Co., Ltd. 2021-2023 V2.2

Miniature Fuses
(Cartridge Fuse-links)

Cartridge Fuse-links (CFL) Features & Model List Overview

Rated Current (A) \ Page	15	17	20
50.00	○	○	○
40.00	○	○	○
30.00	○	○	○
25.00	○	○	○
21.00	○	○	○
20.00	○	SGF520-20A	SGT520-20A
16.00	○	SGF520-16A	SGT520-16A
15.00	○	SGF520-15A	SGT520-15A
13.00	SC625FM13A	○	○
12.50	○	SGF520-12.5A	SGT520-12.5A
12.00	○	SGF520-12A	SGT520-12A
10.00	SC625FM10A	SGF520-10A	SGT520-10A
8.00	○	SGF520-8A	SGT520-8A
7.00	SC625FM7A	○	○
6.30	○	SGF520-6.3A	SGT520-6.3A
6.00	○	○	○
5.00	SC625FM5A	SGF520-5A	SGT520-5A
4.00	○	SGF520-4A	SGT520-4A
3.15	○	SGF520-3.15A	SGT520-3.15A
3.00	SC625FM3A	○	○
2.50	○	SGF520-2.5A	SGT520-2.5A
2.00	○	SGF520-2A	SGT520-2A
1.60	○	SGF520-1.6A	SGT520-1.6A
1.25	○	SGF5201.25A	SGT520-1.25A
1.00	○	SGF520-1A	SGT520-1A
0.80	○	SGF520-800mA	SGT520-800mA
0.63	○	SGF520-630mA	SGT520-630mA
0.50	○	SGF520-500mA	SGT520-500mA
0.40	○	○	○
0.315	○	○	○
0.25	○	○	○
0.20	○	○	○
0.16	○	○	○
0.125	○	○	○
0.10	○	○	○
Model			

$U_{r(VAC)(VDC)}$ Rated Voltage	264 VAC	250 VAC	
Time Feature	Time-Lag	Fast Acting	Time-Lag
Tube Material	Ceramic	Glass	
Standards	IEC / BS	IEC / UL	
Breaking Capacity	6 kA	35 A ~ 200 A Low	
Physical Size (mm)	Φ6.35 × 25.4	Φ5 × 20	
Product Structure	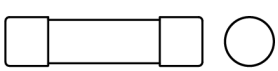	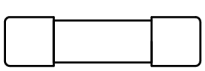	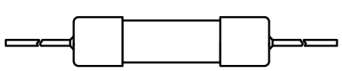

Miniature Fuses

All Rights Reserved by Xiamen SET Electronics Co., Ltd. 2021-2023 V2.2

Miniature Fuses
(Cartridge Fuse-links)

Cartridge Fuse-links (CFL) Features & Model List Overview

Rated Current (A) \ Page	23	23	26	26
50.00	○	○	○	○
40.00	○	○	○	○
30.00	○	○	SCT520T30A	SCT520PT30A
25.00	SCF520F25A	SCF520PF25A	SCT520T25A	SCT520PT25A
21.00	○	○	○	○
20.00	SCF520F20A	SCF520PF20A	SCT520T20A	SCT520PT20A
16.00	SCF520F16A	SCF520PF16A	SCT520T16A	SCT520PT16A
15.00	SCF520F15A	SCF520PF15A	SCT520T15A	SCT520PT15A
13.00	○	○	○	○
12.50	SCF520F12.5A	SCF520PF12.5A	SCT520T12.5A	SCT520PT12.5A
12.00	SCF520F12A	SCF520PF12A	SCT520T12A	SCT520PT12A
10.00	SCF520F10A	SCF520PF10A	SCT520T10A	SCT520PT10A
8.00	SCF520F8A	SCF520PF8A	SCT520T8A	SCT520PT8A
7.00	○	○	○	○
6.30	SCF520F6.3A	SCF520PF6.3A	SCT520T6.3A	SCT520PT6.3A
6.00	○	○	○	○
5.00	SCF520F5A	SCF520PF5A	SCT520T5A	SCT520PT5A
4.00	SCF520F4A	SCF520PF4A	SCT520T4A	SCT520PT4A
3.15	SCF520F3.15A	SCF520PF3.15A	SCT520T3.15A	SCT520PT3.15A
3.00	SCF520F3A	SCF520PF3A	SCT520T3A	SCT520PT3A
2.50	SCF520F2.5A	SCF520PF2.5A	SCT520T2.5A	SCT520PT2.5A
2.00	SCF520F2A	SCF520PF2A	SCT520T2A	SCT520PT2A
1.60	SCF520F1.6A	SCF520PF1.6A	SCT520T1.6A	SCT520PT1.6A
1.25	SCF520F1.25A	SCF520PF1.25A	SCT520T1.25A	SCT520PT1.25A
1.00	SCF520F1A	SCF520PF1A	SCT520T1A	SCT520PT1A
0.80	SCF520F800mA	SCF520PF800mA	SCT520T800mA	SCT520PT800mA
0.63	SCF520F630mA	SCF520PF630mA	SCT520T630mA	SCT520PT630mA
0.50	SCF520F500mA	SCF520PF500mA	SCT520T500mA	SCT520PT500mA
0.40	SCF520F400mA	SCF520PF400mA	SCT520T400mA	SCT520PT400mA
0.315	○	○	○	○
0.25	○	○	○	○
0.20	○	○	○	○
0.16	○	○	○	○
0.125	○	○	○	○
0.10	○	○	○	○
$U_{r(VAC)(VDC)}$ Rated Voltage	(125 ~ 600) VAC / VDC		(125 ~ 500) VAC / VDC	
Time Feature	Fast Acting		Time-Lag	
Tube Material	Ceramic			
Standards	IEC / UL			
Breaking Capacity	500 A ~ 1500 A High			
Physical Size (mm)	Φ5 × 20			
Product Structure	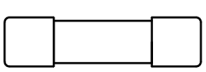		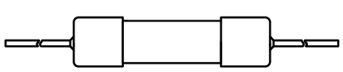	

Model

Miniature Fuses

All Rights Reserved by Xiamen SET Electronics Co., Ltd. 2021-2023 V2.2

Description

Miniature Fuses is an Over Current Protection device. Its resistance is very low. When the circuit works normally, it is equivalent to a wire, which can conduct the circuit continuously and stably. When the current fluctuates due to circuit instability or external interference, it should also be able to withstand a certain range of overload. Only when overload or short circuit happens, Miniature Fuses can blow fast to protect the circuit.

SETsafe | SETfuse Miniature Fuses is widely used in all kinds of electrical equipment. It has a variety of mounting modes, compact structure, reliable and stable performance. Technical parameters of SETsafe | SETfuse Miniature Fuses: Its rated current ranges from 0.1 A to 40 A, rated voltage ranges from 125 VAC to 600 VAC, and from 24 VDC to 600 VDC, complies with RoHS and REACH, and is approved by cURus, VDE, PSE, CCC, CQC, KC, TUV.

Glossary

Item	Description
Fuse	A device, by the fusing of one or more of its specially designed and proportioned components, opens the circuit in which it is inserted by breaking the current when this exceeds a given value for a sufficient time. —(IEC 60127)
Fast Acting Fuse	A fuse which opens on overload and short circuits very quickly. This type of fuse is not designed to withstand temporary overload currents associated with some electrical load. UL listed or recognized fast acting fuses would typically open within 5 s when subjected to 200% to 250% of its rated current. IEC has two categories of fast acting fuses: ● F = Fast acting, opens on 10 times rated current within 0.001 s to 0.01 s. ● FF = Very fast acting, opens on 10 times rated current within less than 0.001 s. —(UL 248)
Time-Lag Fuse	A fuse with a built-in delay that allows temporary and harmless inrush currents to pass without operating. In design, the breaking time under the condition of continuous overload and short-circuit current shall be: UL listed or recognized time delay fuses typically open in 2 minutes Max. when subjected to 200% to 250% of rated current. IEC has two categories of time delay fuses: ● T = Time-Lag, opens on 10 times rated current within 0.01 s to 0.3 s. ● TT = Long Time-Lag, opens on 10 times rated current within 0. 1 s to 1 s. —(UL 248)
Rated Current	The rated current of a fuse identifies its current-carrying capacity based on a controllable set of test conditions. Each fuse is marked with its rated current, this rating can be identified with a numeric, alpha, or color code mark. —(IEC 60127)
Rated Voltage	A Max. open circuit voltage in which a fuse can be used, yet safely interrupt an overcurrent. Exceeding the voltage rating of a fuse impairs its ability to clear an overload or short circuit safely. —(IEC 60127)
RMS Current	The R.M.S. (root mean square) value of any periodic current is equal to the value of the direct current, which flowing through a resistance, produces the same heating effect in the resistance as the periodic current does. —(IEC 60127)

Miniature Fuses

All Rights Reserved by Xiamen SET Electronics Co., Ltd. 2021-2023 V2.2

Glossary

Item	Description
Normal Operating Current	The normal operating current of a circuit is the level of current drawn (in RMS or dc amperes) after it has been energized and is operating under normal conditions. An operating current of 80% or less of rated current is recommended for operation at 25 °C to avoid nuisance openings. For example, a fuse with a Rated Current of 1 A is usually not recommended in circuits with normal operating currents of more than 800 mA. Further derating is required at elevated ambient Temp.. —(UL 248)
Ampere Squared Seconds I^2t	The melting, arcing, or clearing integral of a fuse, termed I^2t, is the thermal energy required to melt, arc, or clear a specific current. It can be expressed as melting I^2t, arcing I^2t or the sum of them, clearing I^2t. —(IEC 60127)
Overload	Can be classified as an overcurrent which exceeds the normal full load current of a circuit by 2 to 5 times its magnitude and stays within the normal current path. —(UL 248)
Overcurrent	A condition which exists in an electrical circuit when the normal load current is exceeded. Overcurrent take on two separate characteristics-overloads and short circuits. —(UL 248)
Short Circuit	An overcurrent that leaves the normal current path and greatly exceeds the normal full load current of the circuit by a factor of tens, hundreds, or thousands times. —(UL 248)
Arcing Time	The amount of time from the instant the fuse link has melted until the overcurrent is interrupted, or cleared. —(IEC 60127)
Clearing Time	The total time between the beginning of the overcurrent and the final opening of the circuit at rated voltage by an overcurrent protective device. Clearing time is the total of the melting time and the arcing time. —(IEC 60127)
Breaking Capacity of a Fuse-link	Value (r.m.s. for AC) of prospective current that a fuse-link is capable of breaking at a stated voltage under prescribed conditions of use and behaviour. —(IEC 60127)

Miniature Fuses

All Rights Reserved by Xiamen SET Electronics Co., Ltd. 2021-2023 V2.2

ATTENTION

Inspection

Cold Resistance Test

a. Applied current shall be less than 10% of rated current, at ambient Temp. of (23±2) °C.

b. (4-Wire) Resistance Measurement.

Usage

a. Do not touch the fuse body or lead wire when power on, avoiding scald or electric shock.

b. Air pressure is 80 kPa to 106 kPa. These values represent an altitude of +2000 m to -500 m, respectively.

Replacement

For safety reasons, the Fuse is the non-resettable product, please ensure that the alternative Fuse is the same type when replace it.

Storage

Please store the fuse in the environment without high temperature, high humidity or corrosive gas, to avoid reducing the solderability of the lead wire. Please use them up within 1 year after receiving the goods.

Installation Position

Do not install the fuse on a location that may often subject to severe continuous vibration.

All Rights Reserved by Xiamen SET Electronics Co., Ltd. 2021-2023 V2.2

Installation

Mechanical stress

Do not apply mechanical stress to the fuse body during or after the installation.

Wave soldering Parameters (For Reference Only)

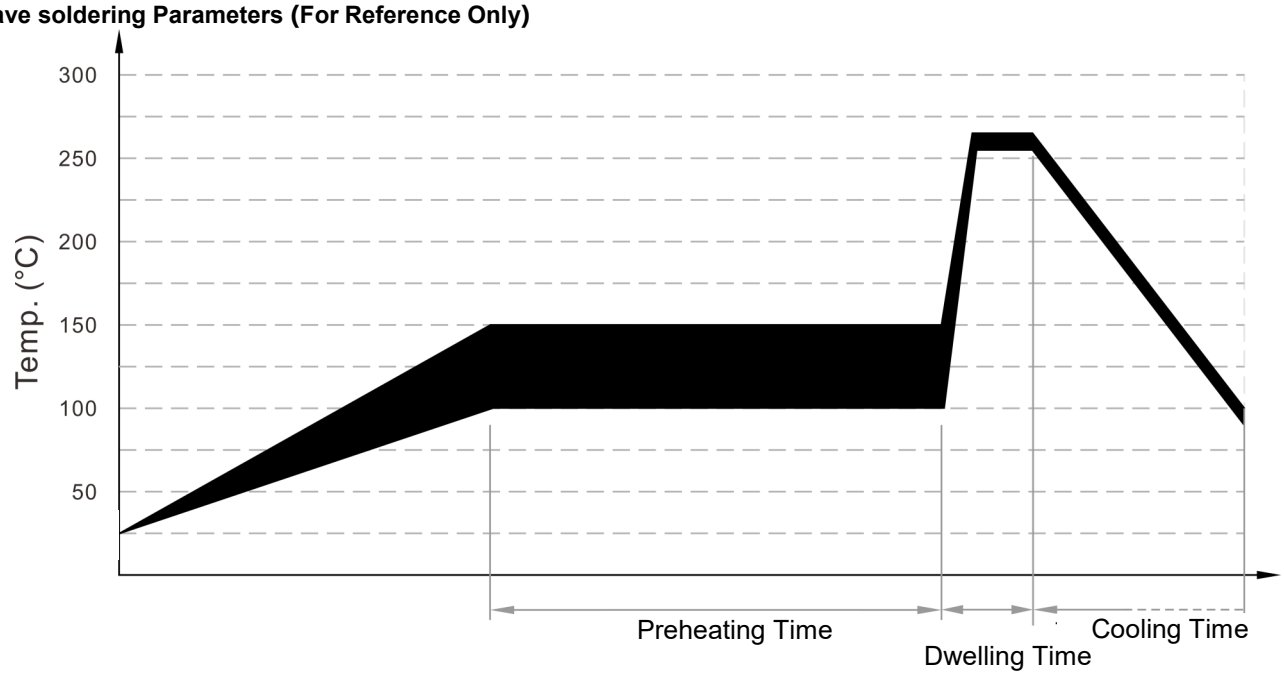

Item	Temp. (°C)	Time (s)
Preheating	100 to 150	60 to 180
Dwelling	260 ± 5	2 to 5

Recommended Hand-Soldering Parameters

Solder Iron Temp.: (350 ± 5) ℃

Heating Time: 5 seconds Max.

Lead Wire Bending

If the lead wire has to be bent, please pay attention to the distance between body and the bending point. Refer to the following table.

Axial Type			
d	≤ Φ1.0 mm	> Φ1.0 mm	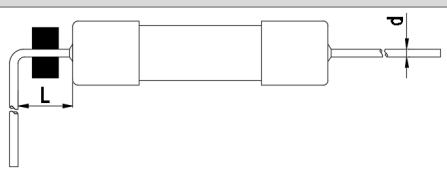
L	≥ 3 mm	≥ 5 mm	
Radial Type			
Dimension (mm)	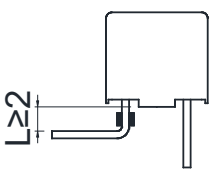		

All Rights Reserved by Xiamen SET Electronics Co., Ltd. 2021-2023 V2.2

Miniature Fuses
(Cartridge Fuse-links)

SCF632(P) Series, Ceramic Tube

Dimensions (mm)

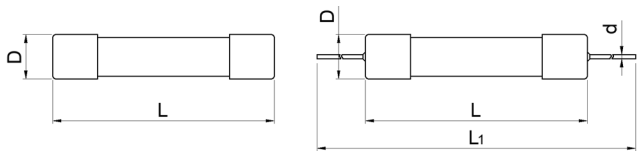

L	L_1	D	d
31.8 ± 1.0	108 ± 2	Φ6.35 ± 0.20	≤16 A: Φ0.80 ± 0.05 >16 A ~ 30 A: Φ1.00 ± 0.05

Key Features

- Physical Size: Φ6.35 mm × 31.8 mm
- High Breaking Capacity
- Ceramic Tube Construction
- Designed To UL 248-14
- Lead-free (Pb-free)
- RoHS & REACH Compliant

Agency Approvals

Agency Approvals	Agency File Number	Ampere Range
c UL us	E345932	1 A ~ 30 A

Applications

- Power Supply
- Household Appliance
- Surge Protective Device (SPD)
- Charging Pile
- Smart Home
- Office Equipment
- Electric Tool
- Medical Equipment
- Instruments and Apparatuses

Time Current Curve (For Reference Only)

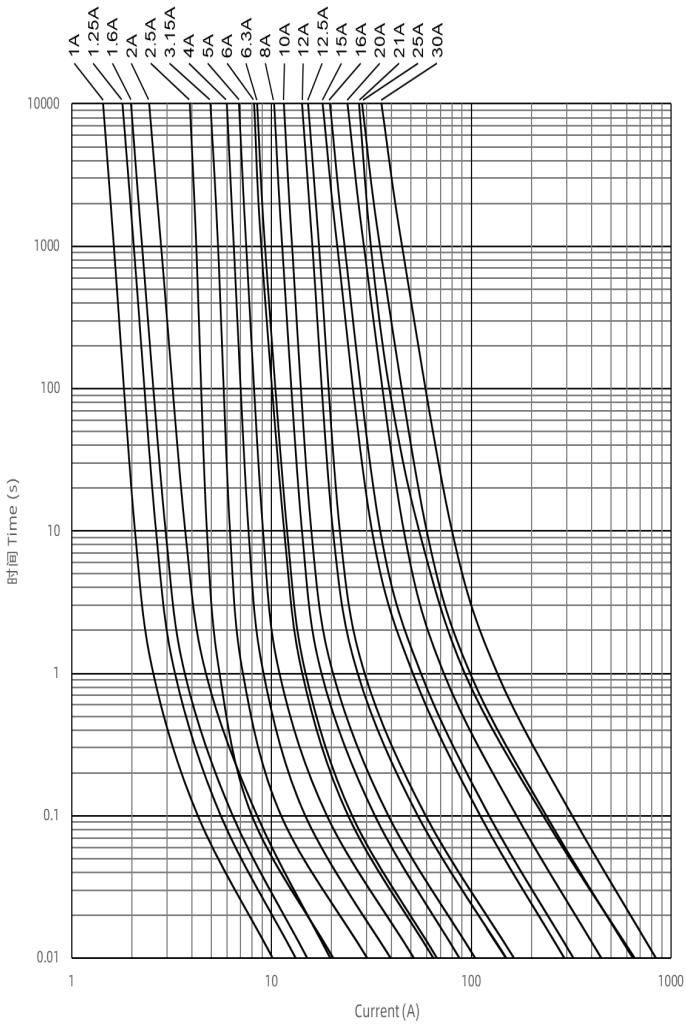

Product Number System

SCF6321.25A250V

- Rated Voltage
- Rated Current
- Product Series
  - SCF632: Cartridge Type
  - SCF632P: Axial Lead Type

Structure

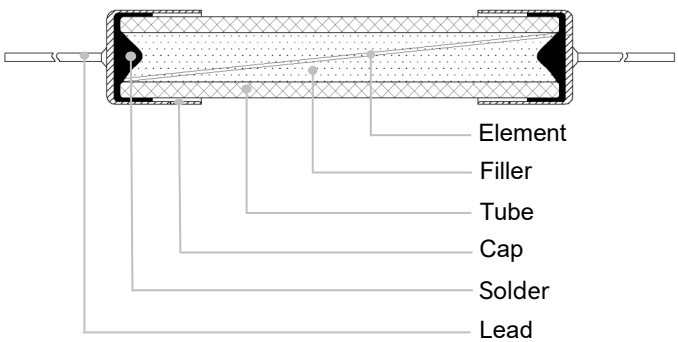

All Rights Reserved by Xiamen SET Electronics Co., Ltd. 2021-2023 V2.2

Specifications

Series	Rated Current (A)	Rated Breaking Capacity	Average Typical Melting I^2t [a] (A²sec)	Agency Approvals cURus	Environmental RoHS	Environmental REACH
SCF632(P)	1	1500 A @ 250 VAC 10 kA @ 600 / 500 / 400 / 350 / 300 / 250 VAC 50 kA @ 600 / 500 / 400 / 350 / 300 / 250 VDC	1.11	●	●	●
SCF632(P)	1.25		1.87	●	●	●
SCF632(P)	1.6		2.24	●	●	●
SCF632(P)	2		3.85	●	●	●
SCF632(P)	2.5		4.03	●	●	●
SCF632(P)	3.15		9.13	●	●	●
SCF632(P)	4		15.7	●	●	●
SCF632(P)	5		26.7	●	●	●
SCF632(P)	6		42.5	●	●	●
SCF632(P)	6.3		45.5	●	●	●
SCF632(P)	8		78.6	●	●	●
SCF632(P)	10		116	●	●	●
SCF632(P)	12		220	●	●	●
SCF632(P)	12.5		284	●	●	●
SCF632(P)	15	1500 A @ 250 VAC 1000A @ 600 / 500 / 400 / 350 / 300 / 250 VAC 1000A @ 600 / 500 / 400 / 350 / 300 / 250 VDC	1010	●	●	●
SCF632(P)	16		1320	●	●	●
SCF632(P)	20		2680	●	●	●
SCF632(P)	21		6000	●	●	●
SCF632(P)	25		5430	●	●	●
SCF632(P)	30		10800	●	●	●

a: I^2t value is measured at 10 I_N.

Miniature Fuses

All Rights Reserved by Xiamen SET Electronics Co., Ltd. 2021-2023 V2.2

Opening Time / Current Characteristic

1.0 I_N	2.5 I_N
Min.	**Max.**
60 minutes	30 minutes

Packaging Information

Dimensions (mm)

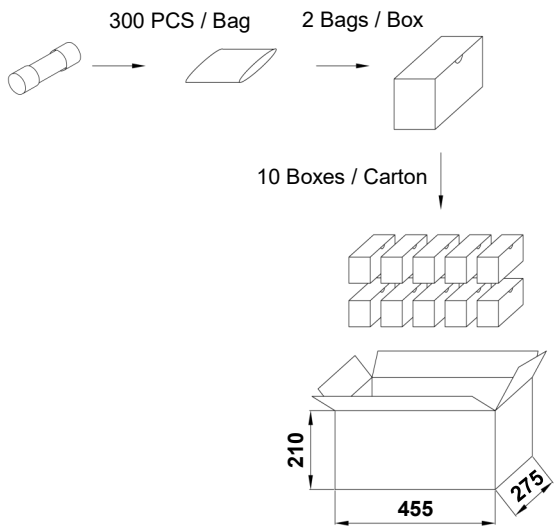

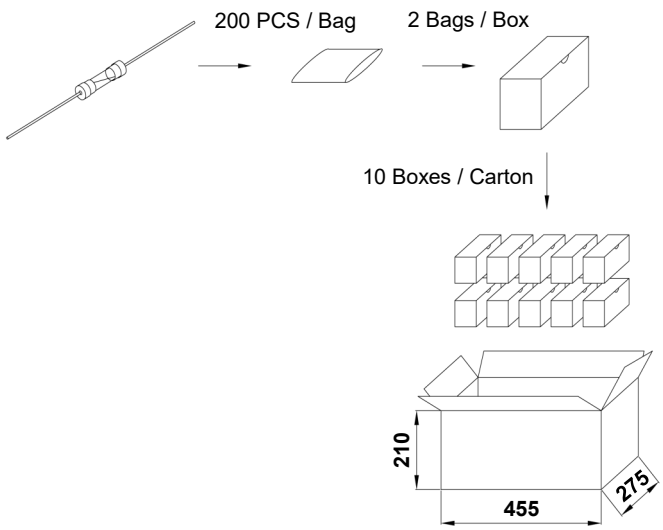

Cartridge Type			
Item	**PE Bag**	**Box**	**Carton**
Q'ty (PCS)	300	600	6,000
Gross Weight (kg)		18.5 ± 10%	

Axial Lead Type			
Item	**PE Bag**	**Box**	**Carton**
Q'ty (PCS)	200	400	4,000
Gross Weight (kg)		13 ± 10%	

Miniature Fuses

All Rights Reserved by Xiamen SET Electronics Co., Ltd. 2021-2023 V2.2

Miniature Fuses
(Cartridge Fuse-links)

SCF625(P) Series, Fast Acting, Ceramic Tube

Dimensions (mm)

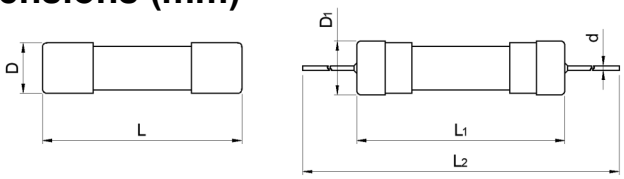

L	L_1	L_2	D	D_1	d
25.4 ± 1.0	26.5 ± 1.0	103 ± 2	Φ6.35 ± 0.20	Φ6.81± 0.30	≤16 A: Φ0.80 ± 0.05 >16 A ~ 30 A: Φ1.00 ± 0.05 >30 A: Φ1.20 ± 0.05

Key Features

- Physical Size: Φ6.35 mm × 25.4 mm
- Fast Acting
- High Breaking Capacity
- Ceramic Tube Construction
- Designed To UL 248-14
- Lead-free (Pb-free)
- RoHS & REACH Compliant

Agency Approvals

Agency Approvals	Agency File Number	Ampere Range
c UL us	E345932	1 A ~ 30 A

Applications

- Power Supply
- Household Appliance
- Surge Protective Device (SPD)
- Power Strips
- Smart Home
- Office Equipment
- Electric Tool
- Medical Equipment
- Instruments and Apparatuses

Time Current Curve (For Reference Only)

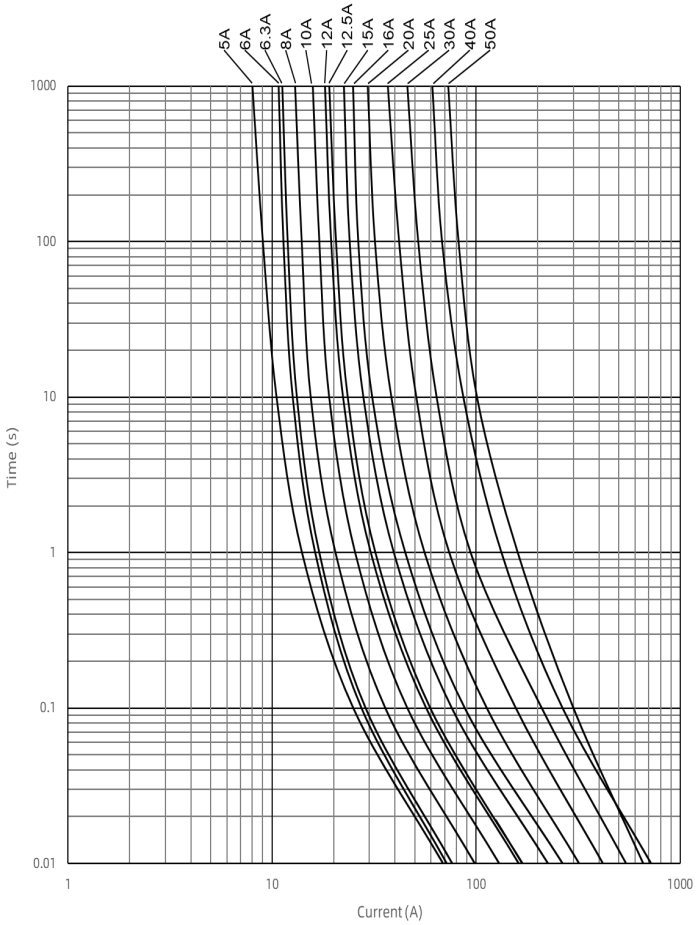

Product Number System

SCF625F12.5A250V

- Rated Voltage
- Rated Current
- Fast Acting
- Product Series
  - SCF625: Cartridge Type
  - SCF625P: Axial Lead Type

Structure

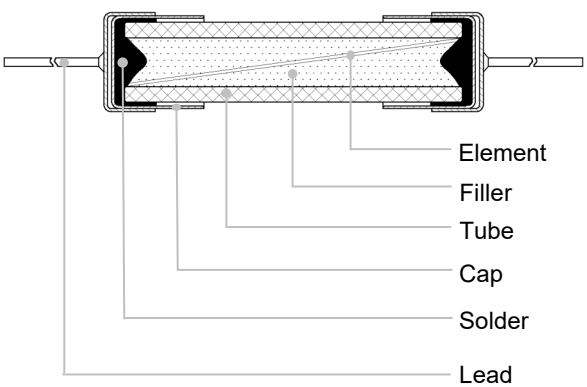

Miniature Fuses

All Rights Reserved by Xiamen SET Electronics Co., Ltd. 2021-2023 V2.2

Specifications

Series	Rated Current (A)	Rated Breaking Capacity	Average Typical Melting I^2t [a] (A²sec)	Agency Approvals cURus	Environmental RoHS	Environmental REACH
SCF625(P)	5	10 kA @ 250 VAC 2000 A @ 400 VDC 2500 A @ 75 VDC	50	●	●	●
SCF625(P)	6		48	●	●	●
SCF625(P)	6.3		59	●	●	●
SCF625(P)	8		100	●	●	●
SCF625(P)	10		160	●	●	●
SCF625(P)	12		265	●	●	●
SCF625(P)	12.5		285	●	●	●
SCF625(P)	15		460	●	●	●
SCF625(P)	16		660	●	●	●
SCF625(P)	20		1050	●	●	●
SCF625(P)	25	300 A @ 400 VDC 2500 A @ 75 VDC	2200	●	●	●
SCF625(P)	30		3650	●	●	●
SCF625(P)	40	2500 A @ 75 VDC	5595	●	●	●
SCF625(P)	50		5012	●	●	●

a: I^2t value is measured at 10 I_N.

Miniature Fuses

All Rights Reserved by Xiamen SET Electronics Co., Ltd. 2021-2023 V2.2

Opening Time / Current Characteristic

1.0 I_N	2.0 I_N	2.5 I_N	3.0 I_N
Min.	**Max.**	**Max.**	**Max.**
4 h	120 s	30 s	5 s

Packaging Information

Dimensions (mm)

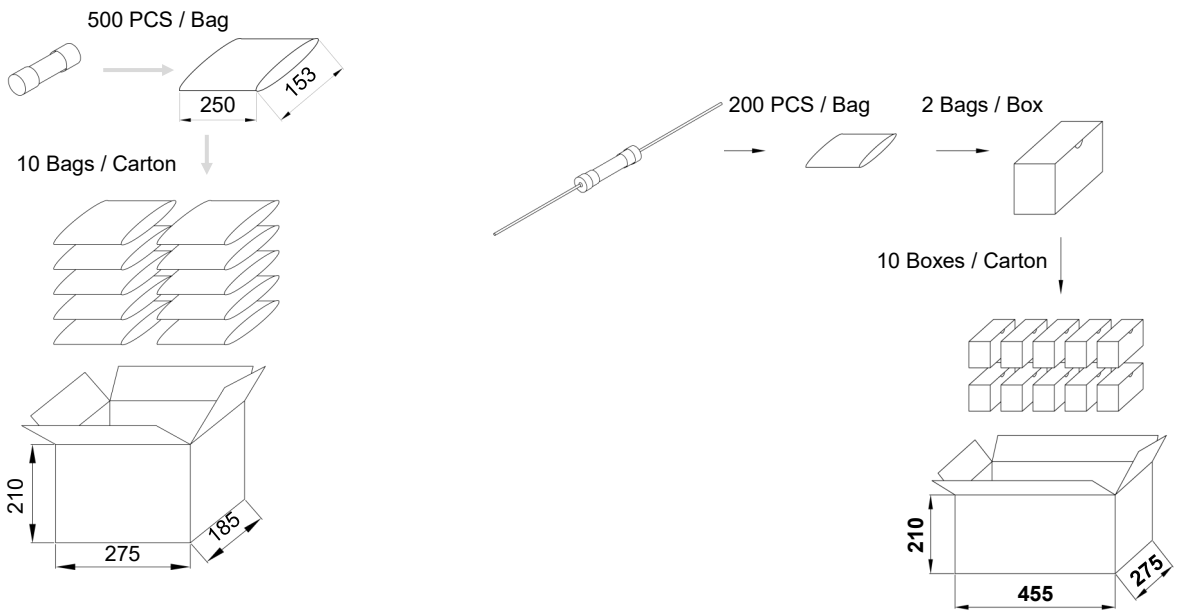

Cartridge Type		
Item	**PE Bag**	**Carton**
Q'ty (PCS)	500	5,000
Gross Weight (kg)		13.5 ± 10%

Axial Lead Type			
Item	**PE Bag**	**Box**	**Carton**
Q'ty (PCS)	200	400	4,000
Gross Weight (kg)		15.5 ± 10%	

Miniature Fuses

All Rights Reserved by Xiamen SET Electronics Co., Ltd. 2021-2023 V2.2

Miniature Fuses
(Cartridge Fuse-links)

SC625 Series, Fast/Medium Acting, Ceramic Tube

Dimensions (mm)

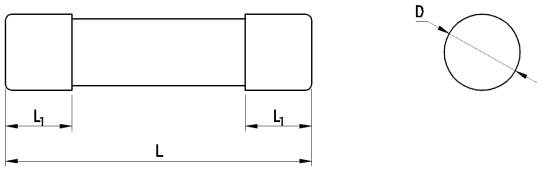

L	L_1	D
25.4	5.5 ± 0.8	$\Phi 6.30^{+0.20}_{-0.05}$

Description

Φ6.3 x 25.4 mm, Fast/Medium Acting, high breaking capacity cartridge fuse, designed to BS & IEC standards.

Features

- Physical Size: Φ6.3 × 25.4 mm
- Fast/Medium Acting
- High Breaking Capacity
- Ceramic Tube, Nickel-plated Brass End cap Construction
- Designed To BS 1362, IEC 60269-3, GB/T 13539.3
- Lead-free (Pb-free)
- RoHS & REACH Compliant

Applications

- BS Plug
- BS Socket
- Household Appliance
- Smart Home
- Cable

Part Numbering System

SC625FM13A264V

- Rated Voltage
- Rated Current
- Fast/Medium Acting
- Product Series

Structure Diagram

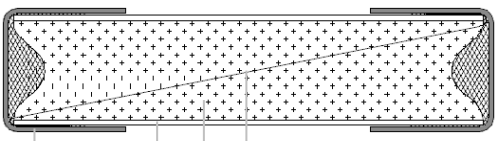

- Element
- Filler
- Tube
- Cap

Agency Approvals

Agency Approvals	Agency File Number	Ampere Range (A)
CCC	Pending	3 to 13
ASTA	Pending	3 to 13

Time Current Curve (For Reference Only)

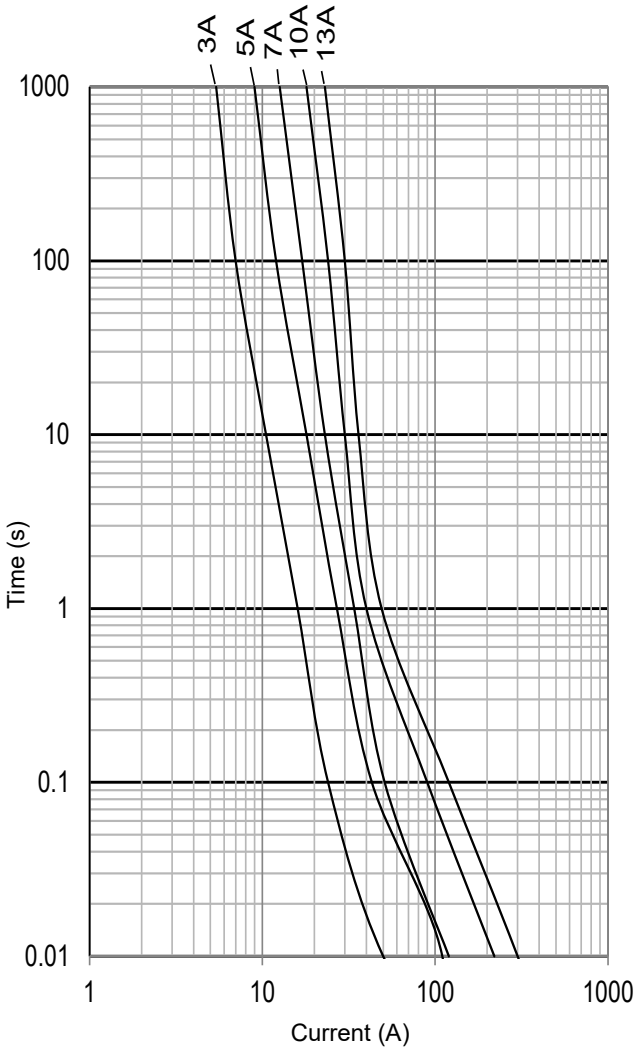

All Rights Reserved by Xiamen SET Electronics Co., Ltd. 2021-2023 V2.2

Specifications

Series	Rated Current (A)	Rated Voltage (VAC)	Rated Breaking Capacity	Rated Power Dissipation (W)	Average Typical Melting I^2t [a] (A²sec)	Color	Agency Approvals		Environmental	
							CCC	ASTA	RoHS	REACH
SC625	3	264	6 kA@264 VAC [b]	1	33.2	Red	○	○	●	●
SC625	5	264			164	Black	○	○	●	●
SC625	7	264			232	Black	○	○	●	●
SC625	10	264			365	Black	○	○	●	●
SC625	13	264			1052	Brown	○	○	●	●

a: The fusing time used to calculate I^2t shall be within the standard range of 8 ms ~ 10 ms.

b: 50 Hz, P.f. 0.3-0.4 .

○: Pending.

Opening Time / Current Characteristic

Rated Current (A)	$1.6I_N$	$1.9I_N$
	Min.	Max.
3 to 13	30 minutes	30 minutes

Packaging Information

All dimensions in mm

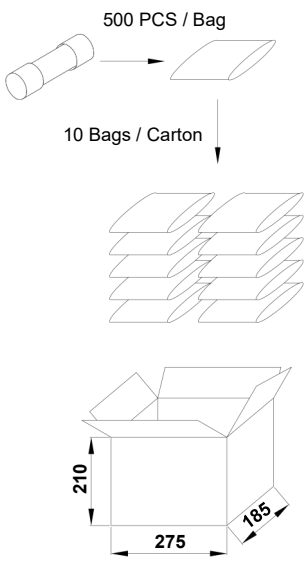

Cartridge Type		
Item	Bag	Carton
Q'ty (PCS)	500	5,000
Gross Weight (kg)	14.0×(1±10%)	

All Rights Reserved by Xiamen SET Electronics Co., Ltd. 2021-2023 V2.2

Miniature Fuses

Miniature Fuses
(Cartridge Fuse-links)

SGF520 Series, Fast Acting, Glass Tube

Dimensions (mm)

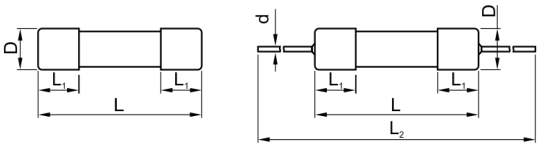

L	L_1	L_2	D	d
20 ± 0.5	5.1 ± 0.3	96 ± 2	Φ5.2 $^{+0.1}_{-0.2}$	≤ 6.3 A: Φ(0.65 ± 0.05) > 6.3 A to 10 A: Φ(0.80 ± 0.05) >10 A to 20 A: Φ(1.0 ± 0.05)

Description

Φ5 x 20 mm, Fast Acting, glass body cartridge fuse, designed to IEC & UL standards.

Features

- Φ5 × 20 mm
- Fast Acting
- Low-Breaking Capacity
- Glass Tube, Nickel-Plated Brass End cap Construction
- Designed to IEC 60127-2 Sheet 2, GB/T 9364.2 Sheet 2
- Lead-free (Pb-free)
- RoHS & REACH Compliant

Applications

- Power Supply
- Household Appliance
- General Lighting
- Smart Home
- Office Equipment
- Electric Tool
- Medical Equipment
- Instruments and Apparatuses

Agency Approvals

Agency Approvals	Agency File Number	Ampere Range
c UL us	E345932	1 A to 10 A
DVE	40033351	1 A to 10 A
CCC	2020980207000069 2020980207000071	1 A to 6.3 A
KC	SU05023-11007 SU05023-11008 SU05023-11009	1 A to 2 A 3.15 A to 6.3 A 8 A to 10 A

Part Numbering System

SGF520F1.25ALP-001

- Other Options
- P: Axial Lead Type
  W: Cartridge Type
- L: Low Breaking Capacity
- Rated Current
- F: Fast Acting
- Product Series

Time Current Curve (For Reference Only)

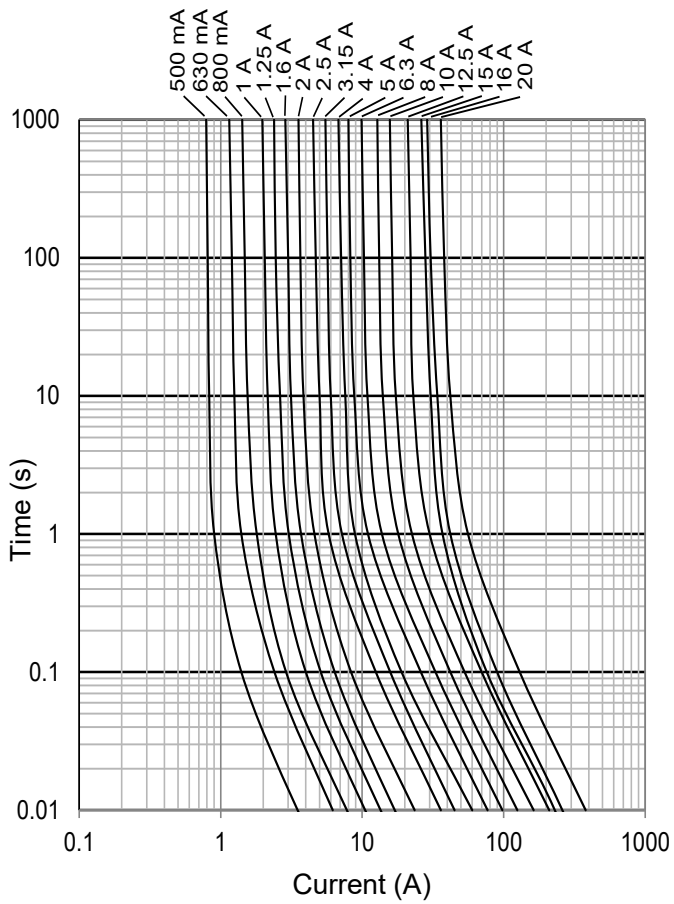

Structure Diagram

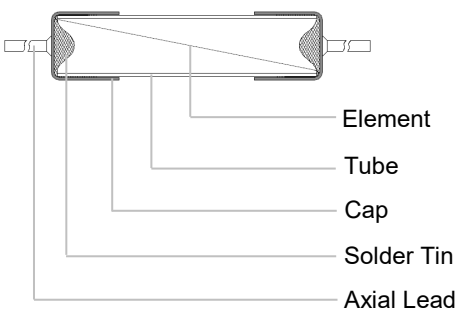

All Rights Reserved by Xiamen SET Electronics Co., Ltd. 2021-2023 V2.2

Miniature Fuses

Specifications

Series	Rated Current	Rated Voltage	Rated Breaking Capacity	Max. Voltage Drop [a]	Average Typical Melting I^2t [b]	Agency Approvals				Environmental	
						CCC	VDE	KC	cURus	RoHS	REACH
	(A)	(VAC)		(mV)	(A^2sec)						
SGF520	0.5	250	35 A@250 VAC	1000	0.33	○	○	○	○	●	●
SGF520	0.63	250		650	0.51	○	○	○	○	●	●
SGF520	0.8	250		240	0.83	○	○	○	○	●	●
SGF520	1	250		200	1.2	●	●	●	●	●	●
SGF520	1.25	250		200	2.6	●	●	●	●	●	●
SGF520	1.6	250		190	4.2	●	●	●	●	●	●
SGF520	2	250		170	6.2	●	●	●	●	●	●
SGF520	2.5	250		170	11.3	○	○	○	○	●	●
SGF520	3.15	250		150	20.8	●	●	●	●	●	●
SGF520	4	250	40 A@250 VAC	130	32	○	○	○	○	●	●
SGF520	5	250	50 A@250 VAC	130	62.5	●	●	●	●	●	●
SGF520	6.3	250	63 A@250 VAC	130	95.2	●	●	●	●	●	●
SGF520	8	250	80 A@250 VAC	130	166		●	●	●	●	●
SGF520	10	250	100 A@250 VAC	130	280		●	●	●	●	●
SGF520	12.5	250	125 A@250 VAC	100	468				○	●	●
SGF520	15	250	150 A@250 VAC	100	675				○	●	●
SGF520	16	250	160 A@250 VAC	100	768				○	●	●
SGF520	20	250	200 A@250 VAC	100	1215				○	●	●

a: Max. Voltage Drop (voltage drop is measured at (23 ± 1) °C ambient temp. at rated current).

b: I^2t value is measured at 10 I_N.

○: Pending

All Rights Reserved by Xiamen SET Electronics Co., Ltd. 2021-2023 V2.2

Opening Time / Current Characteristic

Rated Current (A)	$2.1I_N$	$2.75I_N$		$4I_N$		$10I_N$
	Max.	Min.	Max.	Min.	Max.	Max.
0.5 to 6.3	30 minutes	50 ms	2 s	10 ms	300 ms	20 ms
8 to 10	30 minutes	50 ms	2 s	10 ms	400 ms	40 ms
12 to 20	30 minutes	100 ms	6 s	20 ms	600 ms	60 ms

Packaging Information

All dimensions in mm

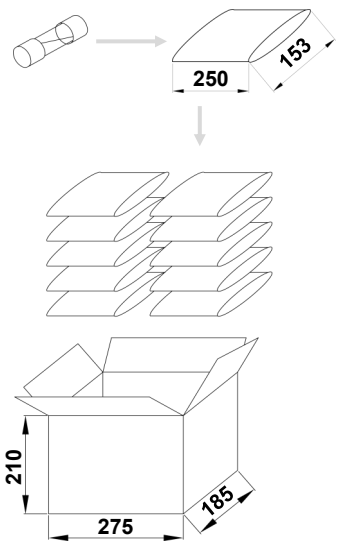

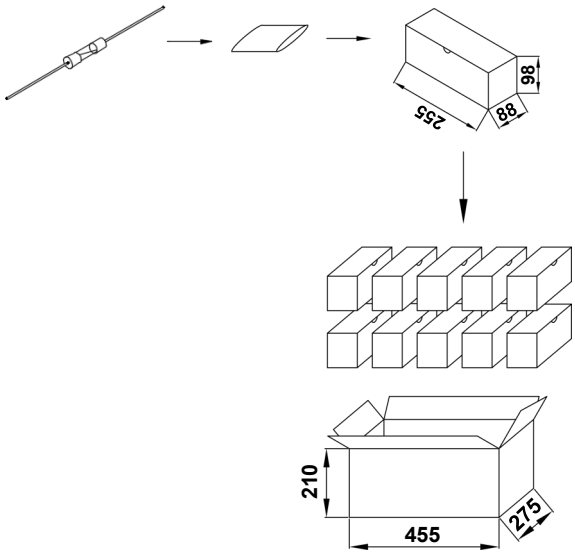

Cartridge Type		
Item	PE Bag	Carton
Quantity (PCS)	1,000	10,000
Gross Weight (kg)		8.0×(1±10%)

Axial Lead Type			
Item	PE Bag	Box	Carton
Quantity (PCS)	400	800	8,000
Gross Weight (kg)		9.0×(1±10%)	

Miniature Fuses

All Rights Reserved by Xiamen SET Electronics Co., Ltd. 2021-2023 V2.2

Miniature Fuses
(Cartridge Fuse-links)

SGT520 Series, Time-Lag, Glass Tube

Dimensions (mm)

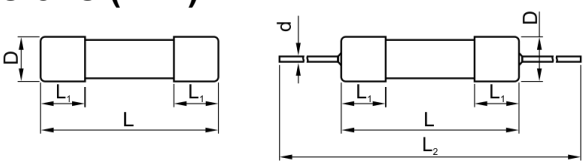

L	L_1	L_2	D	d
20 ± 0.5	5.1 ± 0.3	96 ± 2	Φ5.2 $^{+0.1}_{-0.2}$	≤ 6.3 A: Φ(0.65 ± 0.05) > 6.3 A to 10 A: Φ(0.80 ± 0.05) >10 A to 20 A: Φ(1.0 ± 0.05)

Description

Φ5 x 20 mm, Time-Lag, glass body cartridge fuse, designed to IEC & UL standards.

Features

- Φ5 × 20 mm
- Time-Lag
- Low-Breaking Capacity
- Glass Tube, Nickel-Plated Brass End cap Construction
- Designed to IEC 60127-2 Sheet 2, GB/T 9364.2 Sheet 2
- Lead-free (Pb-free)
- RoHS & REACH Compliant

Applications

- Power Supply
- Household Appliance
- General Lighting
- Smart Home
- Office Equipment
- Electric Tool
- Medical Equipment
- SPD

Part Numbering System

SGT520T1.25ALP-001

- Other Options
- P: Axial Lead Type
  W: Cartridge Type
- L: Low Breaking Capacity
- Rated Current
- T: Time-Lag
- Product Series

Structure Diagram

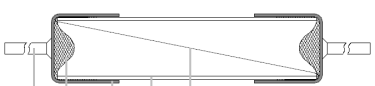

- Element
- Tube
- Cap
- Solder Tin
- Axial Lead

Agency Approvals

Agency Approvals	Agency File Number	Ampere Range (A)
c UL us	E345932	1 A to 10 A
DVE	40033355	1 A to 10 A
CCC	2020980207000068 2020980207000072	1 A to 6.3 A
KC	SU05023-11006 SU05023-11004 SU05023-11005	1 A to 2 A 3.15 A to 6.3 A 8 A to 10 A

Time Current Curve (For Reference Only)

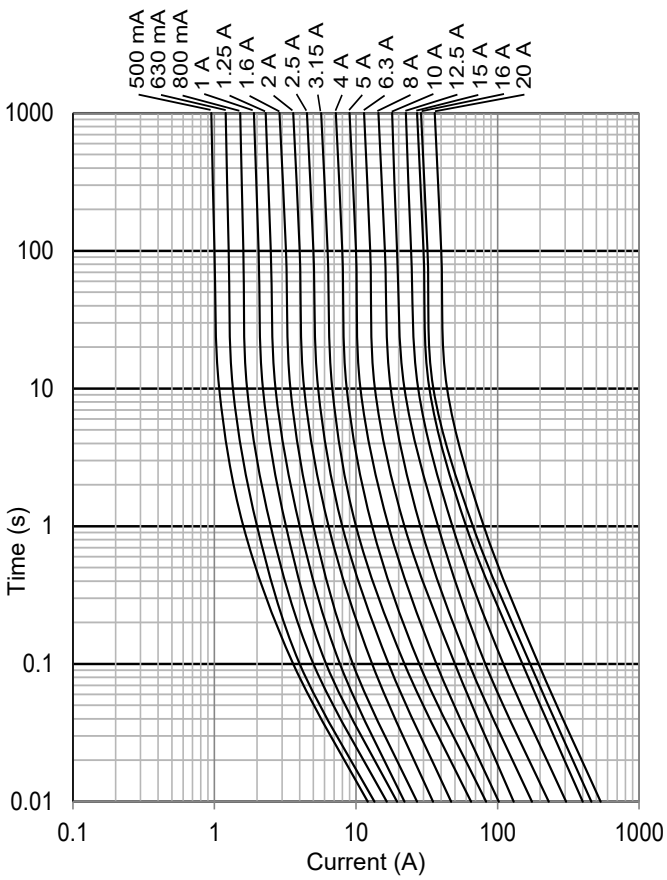

All Rights Reserved by Xiamen SET Electronics Co., Ltd. 2021-2023 V2.2

Miniature Fuses

Specifications

Series	Rated Current	Rated Voltage	Rated Breaking Capacity	Max. Voltage Drop [a]	Average Typical Melting I^2t [b]	Agency Approvals				Environmental	
						CCC	VDE	KC	cURus	RoHS	REACH
	(A)	(VAC)		(mV)	(A^2sec)						
SGT520	0.5	250	35 A@250 VAC	900	1.02	○	○	○	○	●	●
SGT520	0.63	250		300	1.78	○	○	○	○	●	●
SGT520	0.8	250		250	3.52	○	○	○	○	●	●
SGT520	1	250		150	5.7	●	●	●	●	●	●
SGT520	1.25	250		150	11.2	●	●	●	●	●	●
SGT520	1.6	250		150	21	●	●	●	●	●	●
SGT520	2	250		150	30.8	●	●	●	●	●	●
SGT520	2.5	250		120	22	○	○	○	○	●	●
SGT520	3.15	250		100	103	●	●	●	●	●	●
SGT520	4	250	50 A@250 VAC	100	68	○	○	○	○	●	●
SGT520	5	250	50 A@250 VAC	100	117	●	●	●	●	●	●
SGT520	6.3	250	63 A@250 VAC	100	230	●	●	●	●	●	●
SGT520	8	250	80 A@250 VAC	100	355		●	●	●	●	●
SGT520	10	250	100 A@250 VAC	100	570		●	●	●	●	●
SGT520	12	250	120 A@250 VAC	90	750				○	●	●
SGT520	12.5	250	125 A@250 VAC	80	890				○	●	●
SGT520	15	250	150 A@250 VAC	80	1215				○	●	●
SGT520	16	250	160 A@250 VAC	80	1280				○	●	●
SGT520	20	250	200 A@250 VAC	80	3680				○	●	●

a: Max. Voltage Drop (voltage drop is measured at (23 ± 1) °C ambient temp. at rated current).

b: I^2t value is measured at 10 I_N.

○: Pending

All Rights Reserved by Xiamen SET Electronics Co., Ltd. 2021-2023 V2.2

Opening Time / Current Characteristic

Rated Current (A)	$2.1I_N$	$2.75I_N$		$4I_N$		$10I_N$	
	Max.	Min.	Max.	Min.	Max.	Min.	Max.
0.5 to 20	2 minutes	600 ms	10 s	150 ms	3 s	20 ms	300 ms

Packaging Information

All dimensions in mm

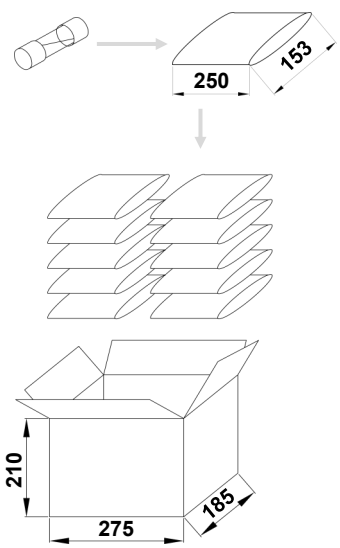

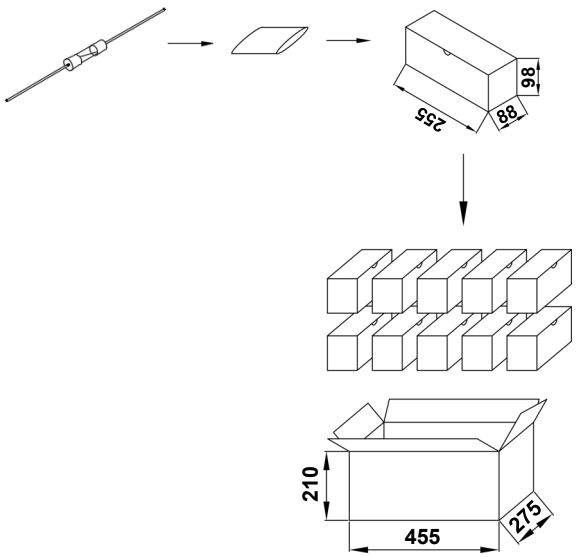

Cartridge Type		
Item	PE Bag	Carton
Quantity (PCS)	1,000	10,000
Gross Weight (kg)		8.0×(1±10%)

Axial Lead Type			
Item	PE Bag	Box	Carton
Quantity (PCS)	400	800	8,000
Gross Weight (kg)		9.0×(1±10%)	

Miniature Fuses

All Rights Reserved by Xiamen SET Electronics Co., Ltd. 2021-2023 V2.2

Miniature Fuses
(Cartridge Fuse-links) SCF520 & SCF520P Series, Fast Acting, Ceramic Tube

Dimensions (mm)

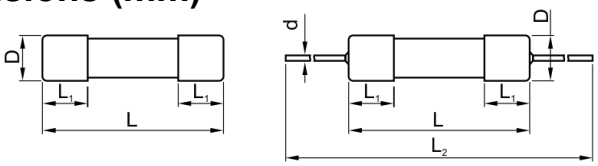

L	L_1	L_2	D	d
20.0 ± 0.5	5.1 ± 0.3	96 ± 2	Φ5.2 $^{+0.1}_{-0.2}$	≤6.3 A: Φ(0.65 ± 0.05) >6.3 A to 10 A: Φ(0.80 ± 0.05) >10 A to 20 A: Φ(1.00 ± 0.05) 25 A: Φ(1.20 ± 0.05)

Description

Φ5 × 20 mm, Fast Acting, high breaking capacity cartridge fuse, designed to IEC & UL standards.

Features

- Φ5 mm × 20 mm
- Fast Acting
- High Breaking Capacity
- Ceramic Tube, Nickel-plated Brass End cap Construction
- Designed to UL 248-14, IEC 60127-1 & 7
- RoHS & REACH Compliant

Applications

- Power Supply
- Household Appliance
- General Lighting
- Smart Home
- Office Equipment
- Electric Tool
- Medical Equipment
- Instruments and Apparatuses

Part Numbering System

SCF520F1.25A250V-001

- Other Options
- Rated Voltage
- Rated Current
- F: Fast Acting
- SCF520: Cartridge Type
  SCF520P: Axial Lead Type

Structure Diagram

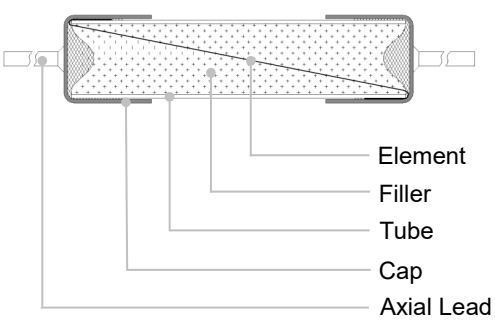

Agency Approvals

Agency Approvals	Agency File Number	Ampere Range
c UL us	E345932	0.5 A to 25 A
CQC	CQC21012313736 CQC21012313738 CQC21012317022 CQC21012317866 CQC21012319112 CQC21012320077 CQC21012322189 CQC21012322191	0.4 A to 20 A
TÜVRheinland	R50541719	1 A to 20 A

Time Current Curve (For Reference Only)

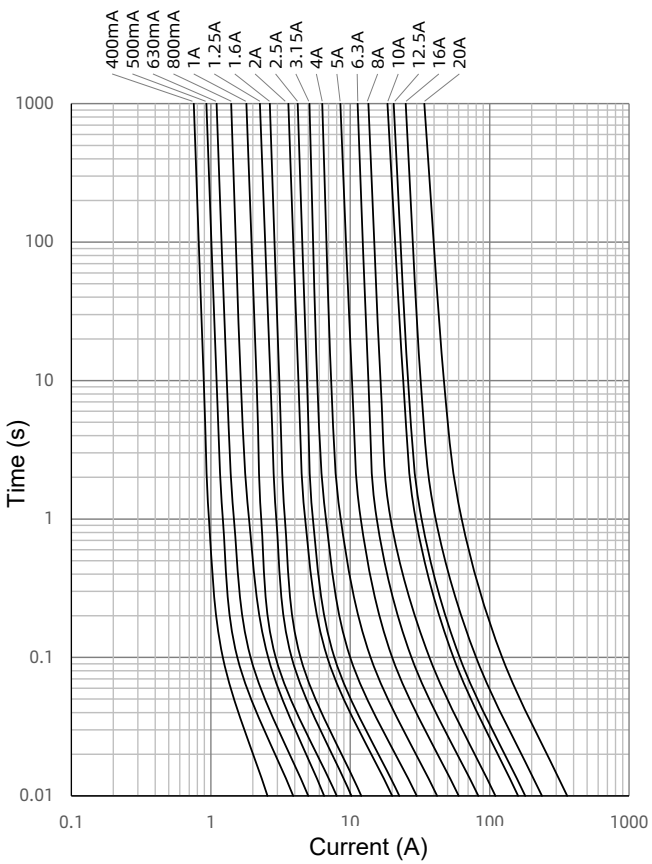

All Rights Reserved by Xiamen SET Electronics Co., Ltd. 2021-2023 V2.2

Miniature Fuses

Miniature Fuses
(Cartridge Fuse-links) SCF520 & SCF520P Series, Fast Acting, Ceramic Tube

Specifications

Series	Rated Current	Rated Breaking Capacity	Average Typical Melting I^2t [a]	Agency Approvals			Environmental	
				CQC	TUV	cURus	RoHS	REACH
	(A)		(A²sec)					
SCF520 SCF520P	0.4	UL (0.4 A-10 A): 1500 A@300 VAC 300 A@500 VAC / DC UL (12 A-20 A): 1500 A@300 VAC 300 A@500 VAC 300 A@420 VDC UL (25 A): 1500 A@300VAC 300 A@420VAC / DC UL (SCF520P25A): 300 @500VAC	0.06	●	○	○	●	●
SCF520 SCF520P	0.5		0.14	●	○	●	●	●
SCF520 SCF520P	0.63		0.23	●	○	●	●	●
SCF520 SCF520P	0.8		0.4	●	○	●	●	●
SCF520 SCF520P	1		0.6	●	●	●	●	●
SCF520 SCF520P	1.25		1.0	●	●	●	●	●
SCF520 SCF520P	1.6		1.35	●	●	●	●	●
SCF520 SCF520P	2		2.9	●	●	●	●	●
SCF520 SCF520P	2.5		4.4	●	●	●	●	●
SCF520 SCF520P	3		7.5			●	●	●
SCF520 SCF520P	3.15		8.5	●	●	●	●	●
SCF520 SCF520P	4		16.5	●	●	●	●	●
SCF520 SCF520P	5		34	●	●	●	●	●
SCF520 SCF520P	6.3		65	●	●	●	●	●
SCF520 SCF520P	8		114	●	●	●	●	●
SCF520 SCF520P	10		235	●	●	●	●	●
SCF520 SCF520P	12.5		307	●	●	●	●	●
SCF520 SCF520P	15		315			●	●	●
SCF520 SCF520P	16		480	●	●	●	●	●
SCF520 SCF520P	20		1250	●	●	●	●	●
SCF520 SCF520P	25		1400			●	●	●

a: I^2t value is measured at 10 I_N. ○ : Pending

Breaking Capacity (CQC/TUV):

SCF520 (0.4 A / 0.5 A / 0.63 A / 1 A / 1.6 A / 2 A / 2.5 A / 3.15 A / 5 A): 5000 A@250 VAC /DC, 300 A@600 VAC / DC, 3000 A@300 VAC
SCF520 (0.8 A / 1.25 A / 4 A / 6.3 A / 12.5 A / 16 A): 5000 A@250 VAC / DC, 300 A@600 VDC, 3000 A@300 VAC, 200 A@500 VAC
SCF520 (10 A): 5000 A@250 VAC / DC, 300 A@500 VAC / DC, 3000 A@300 VAC
SCF520 (20 A): 5000 A@250 VDC, 200 A@350VAC
SCF520P (0.4 A / 0.8 A / 1 A / 4 A / 5 A / 6.3 A / 8 A / 10 A): 5000 A@250 VAC / DC, 300 A@600 VDC, 3000 A@300 VAC, 300 A@500 VAC
SCF520P (0.5 A / 0.63 A / 1.25 A / 1.6 A / 2 A / 2.5 A / 3.15 A): 5000 A@250 VAC / DC, 300 A@600 VAC / DC, 3000 A@300 VAC
SCF520P (12.5 A / 16 A): 5000 A@250 VAC / DC, 300 A@600 VDC, 3000 A@300 VAC, 200 A@420 VAC
SCF520P (20 A): 5000 A@250 VDC, 200 A@420 VDC, 200 A@350 VAC

All Rights Reserved by Xiamen SET Electronics Co., Ltd. 2021-2023 V2.2

Opening Time / Current Characteristic

Rated Current (A)	$2.1I_N$	$2.75I_N$		$4I_N$		$10I_N$
	Max.	Min.	Max.	Min.	Max.	Max.
0.4 to 10	30 minutes	40 ms	20 s	10 ms	1 s	30 ms
12 to 25	30 minutes	40 ms	20 s	10 ms	1 s	80 ms

Packaging Information

All dimensions in mm

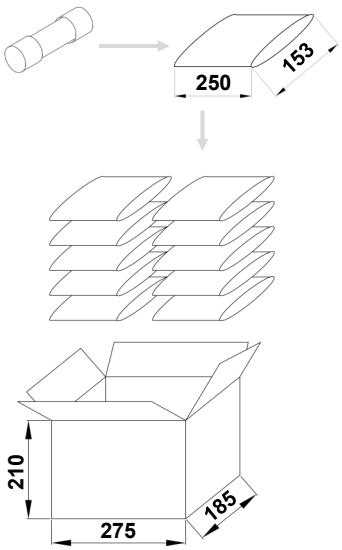

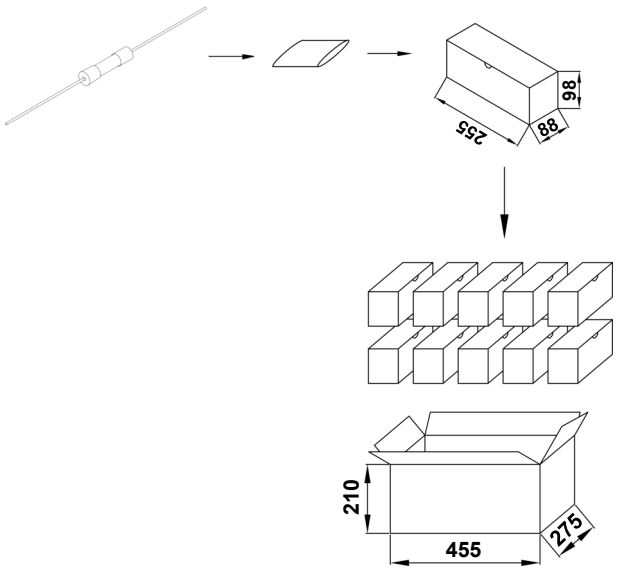

Cartridge Type		
Item	PE Bag	Carton
Quantity (PCS)	1,000	10,000
Gross Weight (kg)		13.5×(1±10%)

Axial Lead Type			
Item	PE Bag	Box	Carton
Quantity (PCS)	400	800	8,000
Gross Weight (kg)		15.0×(1±10%)	

Miniature Fuses

All Rights Reserved by Xiamen SET Electronics Co., Ltd. 2021-2023 V2.2

Miniature Fuses
(Cartridge Fuse-links)

SCT520 & SCT520P Series, Time-Lag, Ceramic Tube

Dimensions (mm)

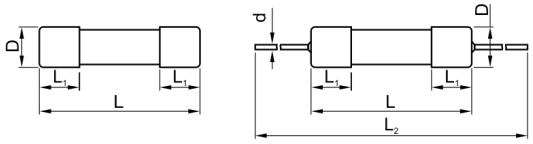

L	L_1	L_2	D	d
20.0 ± 0.5	5.1 ± 0.3	96 ± 2	Φ5.2	≤6.3 A: Φ(0.65 ± 0.05) >6.3 A to 10 A: Φ(0.80 ± 0.05) >10 A to 20 A: (Φ1.00 ± 0.05) 25 A / 30 A: Φ(1.20 ± 0.05)

Description

Φ5 × 20 mm, Time-Lag, high breaking capacity cartridge fuse, designed to IEC & UL standards.

Features

- Φ5 mm × 20 mm
- Time-Lag
- High Breaking Capacity
- Ceramic Tube, Nickel-plated Brass End cap Construction
- Designed to UL 248-14, IEC 60127-1 & 7
- Lead-free (Pb-free)
- RoHS & REACH Compliant

Applications

- Power Supply
- Household Appliance
- General Lighting
- Smart Home
- Office Equipment
- Electric Tool
- Medical Equipment
- SPD

Part Numbering System

SCT520T1.25A250V-001

- **Other Options**
- **Rated Voltage**
- **Rated Current**
- T: Time-Lag
- SCT520: Cartridge Type
  SCT520P: Axial Lead Type

Structure Diagram

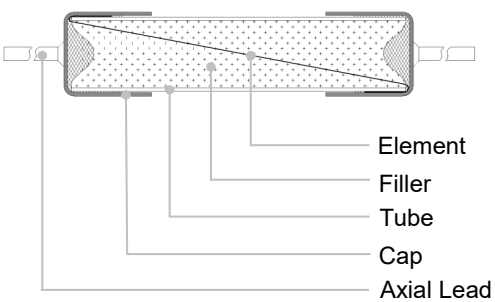

Agency Approvals

Agency Approvals	Agency File Number	Ampere Range
c UL us	E345932	0.4 A to 30 A
CQC	CQC21012316337 CQC21012316630 CQC21012324758 CQC21012325082	0.4 A to 20 A
TÜVRheinland	R50575995 R50576001 R50538205 R50538319	0.8 A to 20 A

Time Current Curve (For Reference Only)

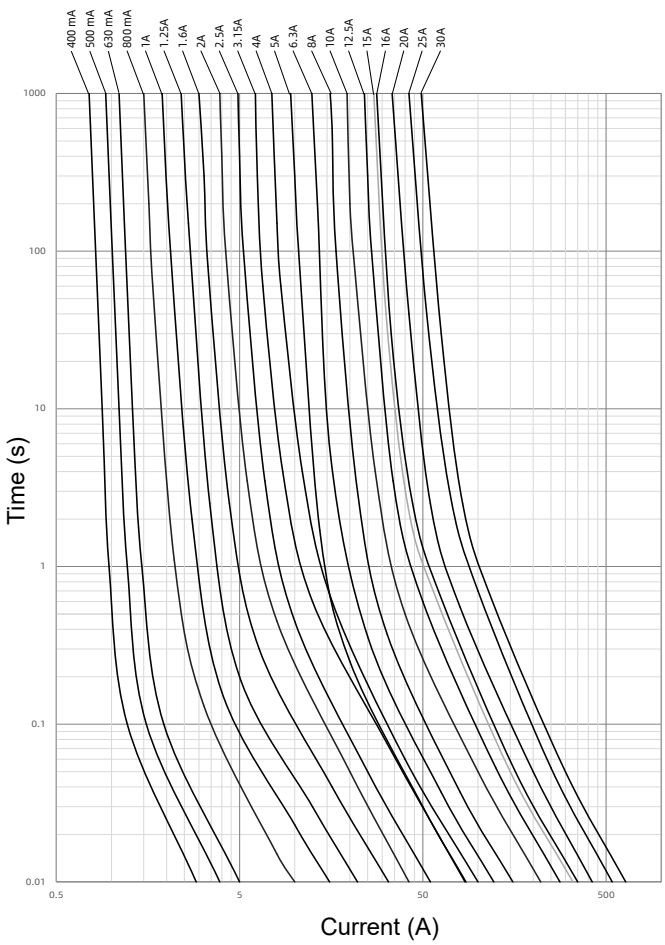

All Rights Reserved by Xiamen SET Electronics Co., Ltd. 2021-2023 V2.2

Miniature Fuses

Specifications

Series	Rated Current (A)	Rated Breaking Capacity	Average Typical Melting I^2t [a] (A²sec)	Agency Approvals: CQC	Agency Approvals: TUV	Agency Approvals: cURus	Environmental: RoHS	Environmental: REACH
SCT520 SCT520P	0.4	UL (0.4 A-10 A): 10 kA@250 VAC / 300 A@400 VAC 200 A@500 VAC SCT520P 2 kA@300 VAC SCT520 1500 A@300 VAC 3 kA@300 VDC / 500 A@500 VDC UL (12.5 A-20 A): 1 kA@250 VAC SCT520P: 300 A@500 VAC SCT520: 500 A@400 VAC 500 A@300 VDC UL (25 A-30 A): SCT520P: 500 A@250 VAC SCT520: 500 A@300 VAC CQC/TUV (0.4 A to 10 A): 5 kA@250 VDC / 3 kA@300 VDC / 500 A@500 VDC / 1500 A@250 VAC / 300 A@400 VAC / 200 A@500 VAC CQC/TUV (12.5 A to 20 A): 500 A@300 VDC / 1 kA@250 VAC / 300 A@400 VAC	0.06	●		●	●	●
SCT520 SCT520P	0.5		0.14	●		●	●	●
SCT520 SCT520P	0.63		0.23	●		●	●	●
SCT520 SCT520P	0.8		0.96	●	●	●	●	●
SCT520 SCT520P	1		2.2	●	●	●	●	●
SCT520 SCT520P	1.25		4.7	●	●	●	●	●
SCT520 SCT520P	1.6		10.2	●	●	●	●	●
SCT520 SCT520P	2		20	●	●	●	●	●
SCT520 SCT520P	2.5		31	●	●	●	●	●
SCT520 SCT520P	3		52			●	●	●
SCT520 SCT520P	3.15		74	●	●	●	●	●
SCT520 SCT520P	4		96	●	●	●	●	●
SCT520 SCT520P	5		75	●	●	●	●	●
SCT520 SCT520P	6.3		147	●	●	●	●	●
SCT520 SCT520P	8		237	●	●	●	●	●
SCT520 SCT520P	10		500	●	●	●	●	●
SCT520 SCT520P	12.5		820	●	●	●	●	●
SCT520 SCT520P	15		1100			●	●	●
SCT520 SCT520P	16		1300	●	●	●	●	●
SCT520 SCT520P	20		2100	●	●	●	●	●
SCT520 SCT520P	25		3100			●	●	●
SCT520 SCT520P	30		4500			●	●	●

a: I^2t value is measured at 10 I_N.

○: Pending

All Rights Reserved by Xiamen SET Electronics Co., Ltd. 2021-2023 V2.2

Opening Time / Current Characteristic

Rated Current (A)	$2.1I_N$	$2.75I_N$		$4I_N$		$10I_N$	
	Max.	Min.	Max.	Min.	Max.	Min.	Max.
0.4 to 0.8	30 minutes	250 ms	80 s	50 ms	5 s	5 ms	150 ms
1 to 3.15	30 minutes	750 ms	80 s	95 ms	5 s	10 ms	150 ms
4 to 10	30 minutes	750 ms	80 s	150 ms	5 s	10 ms	150 ms
12 to 30	30 minutes	750 ms	80 s	150 ms	8 s	10 ms	150 ms

Packaging Information

All dimensions in mm

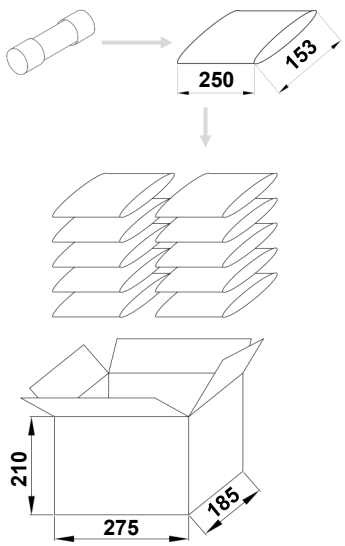

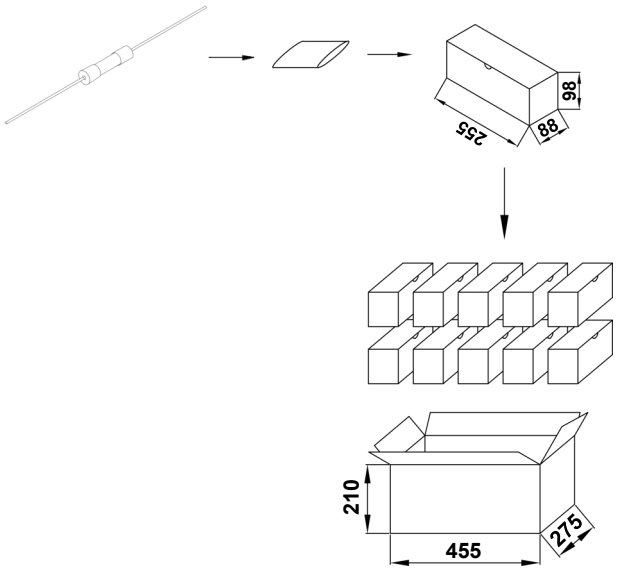

Cartridge Type		
Item	PE Bag	Carton
Quantity (PCS)	1,000	10,000
Gross Weight (kg)		8.0×(1±10%)

Axial Lead Type			
Item	PE Bag	Box	Carton
Quantity (PCS)	400	800	8,000
Gross Weight (kg)		9.0×(1±10%)	

Miniature Fuses

All Rights Reserved by Xiamen SET Electronics Co., Ltd. 2021-2023 V2.2

Miniature Fuses
(Sub-miniature Fuse-links)

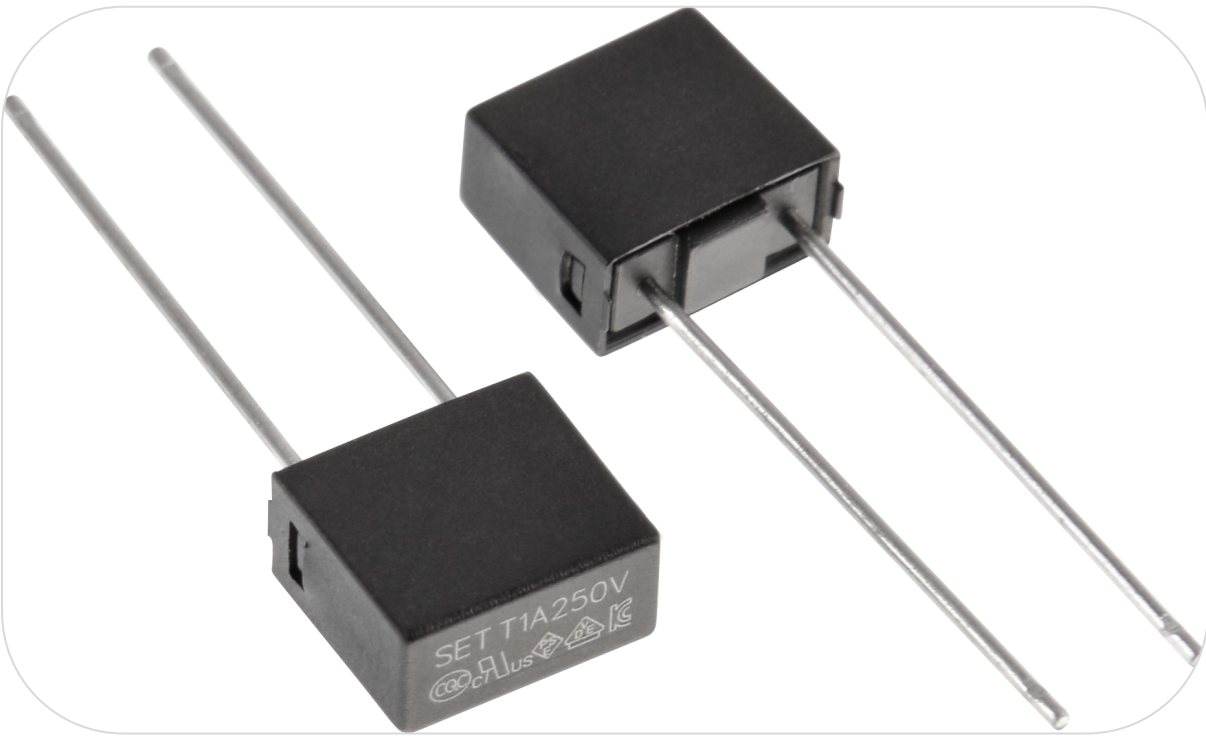

Features

Plastic Case

Fast Acting and Time-Lag

Rated Current: (0.1 to 10) A

Rated Voltage: (125 to 400) VAC

Low and High Breaking Capacity

Lead-free (Pb-free), RoHS & REACH Compliant

Miniature Fuses

All Rights Reserved by Xiamen SET Electronics Co., Ltd. 2021-2023 V2.2

Miniature Fuses
(Sub-miniature Fuse-links)

Sub-miniature Fuse-links (SFL) Feature & Model List Overview

Rated Current (A) \ Page	7	10
40.00	○	○
30.00	○	○
25.00	○	○
20.00	○	○
16.00	○	○
15.00	○	○
13.00	○	○
12.50	○	○
12.00	○	○
10.00	SPF478-10A	SPT478-10A
8.00	SPF478-8A	SPT478-8A
7.00	○	○
6.30	SPF478-6.3A	SPT478-6.3A
5.00	SPF478-5A	SPT478-5A
4.00	SPF478-4A	SPT478-4A
3.15	SPF478-3.15A	SPT478-3.15A
3.00	○	○
2.50	SPF478-2.5A	SPT478-2.5A
2.00	SPF478-2A	SPT478-2A
1.60	SPF478-1.6A	SPT478-1.6A
1.25	SPF478-1.25A	SPT478-1.25A
1.00	SPF478-1A	SPT478-1A
0.80	○	SPT478-800mA
0.63	○	SPT478-630mA
0.50	○	SPT478-500mA
0.40	○	SPT478-400mA
0.315	○	SPT478-315mA
0.25	○	SPT478-250mA
0.20	○	SPT478-200mA
0.16	○	SPT478-160mA
0.125	○	SPT478-125mA
0.10	○	SPT478-100mA
U_r(VAC)(VDC) Rated Voltage	125 VAC ~ 400 VAC	
Time Feature	Fast Acting	Time Lag
Tube Material	Plastic Case	
Standards	IEC / UL	
Breaking Capacity	35 A ~ 150 A	
Physical Size (mm)	4 × 7 × 8	
Product Structure	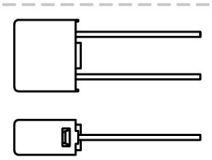	

Miniature Fuses

All Rights Reserved by Xiamen SET Electronics Co., Ltd. 2021-2023 V2.2

Miniature Fuses
(Sub-miniature Fuse-links)

Description

Miniature Fuses is an Over Current Protection device. Its resistance is very low. When the circuit works normally, it is equivalent to a wire, which can conduct the circuit continuously and stably. When the current fluctuates due to circuit instability or external interference, it should also be able to withstand a certain range of overload. Only when overload or short circuit happens, Miniature Fuses can blow fast to protect the circuit.

SETsafe | SETfuse Miniature Fuses is widely used in all kinds of electrical equipment. It has a variety of mounting modes, compact structure, reliable and stable performance. Technical parameters of SETsafe | SETfuse Miniature Fuses: Its rated current ranges from 0.1 A to 40 A, rated voltage ranges from 125 VAC to 600 VAC, and from 24 VDC to 600 VDC, complies with RoHS and REACH, and is approved by cURus, VDE, PSE, CCC, CQC, KC, TUV.

Glossary

Item	Description
Fuse	A device, by the fusing of one or more of its specially designed and proportioned components, opens the circuit in which it is inserted by breaking the current when this exceeds a given value for a sufficient time. —(IEC 60127)
Fast Acting Fuse	A fuse which opens on overload and short circuits very quickly. This type of fuse is not designed to withstand temporary overload currents associated with some electrical load. UL listed or recognized fast acting fuses would typically open within 5 s when subjected to 200% to 250% of its rated current. IEC has two categories of fast acting fuses: ● F = Fast acting, opens on 10 times rated current within 0.001 s to 0.01 s. ● FF = Very fast acting, opens on 10 times rated current within less than 0.001 s. —(UL 248)
Time-Lag Fuse	A fuse with a built-in delay that allows temporary and harmless inrush currents to pass without operating. In design, the breaking time under the condition of continuous overload and short-circuit current shall be: UL listed or recognized time delay fuses typically open in 2 minutes Max. when subjected to 200% to 250% of rated current. IEC has two categories of time delay fuses: ● T = Time-Lag, opens on 10 times rated current within 0.01 s to 0.3 s. ● TT = Long Time-Lag, opens on 10 times rated current within 0. 1 s to 1 s. —(UL 248)
Rated Current	The rated current of a fuse identifies its current-carrying capacity based on a controllable set of test conditions. Each fuse is marked with its rated current, this rating can be identified with a numeric, alpha, or color code mark. —(IEC 60127)
Rated Voltage	A Max. open circuit voltage in which a fuse can be used, yet safely interrupt an overcurrent. Exceeding the voltage rating of a fuse impairs its ability to clear an overload or short circuit safely. —(IEC 60127)
RMS Current	The R.M.S. (root mean square) value of any periodic current is equal to the value of the direct current, which flowing through a resistance, produces the same heating effect in the resistance as the periodic current does. —(IEC 60127)

All Rights Reserved by Xiamen SET Electronics Co., Ltd. 2021-2023 V2.2

Glossary

Item	Description
Normal Operating Current	The normal operating current of a circuit is the level of current drawn (in RMS or dc amperes) after it has been energized and is operating under normal conditions. An operating current of 80% or less of rated current is recommended for operation at 25 °C to avoid nuisance openings. For example, a fuse with a Rated Current of 1 A is usually not recommended in circuits with normal operating currents of more than 800 mA. Further derating is required at elevated ambient Temp.. —(UL 248)
Ampere Squared Seconds I^2t	The melting, arcing, or clearing integral of a fuse, termed I^2t, is the thermal energy required to melt, arc, or clear a specific current. It can be expressed as melting I^2t, arcing I^2t or the sum of them, clearing I^2t. —(IEC 60127)
Overload	Can be classified as an overcurrent which exceeds the normal full load current of a circuit by 2 to 5 times its magnitude and stays within the normal current path. —(UL 248)
Overcurrent	A condition which exists in an electrical circuit when the normal load current is exceeded. Overcurrent take on two separate characteristics-overloads and short circuits. —(UL 248)
Short Circuit	An overcurrent that leaves the normal current path and greatly exceeds the normal full load current of the circuit by a factor of tens, hundreds, or thousands times. —(UL 248)
Arcing Time	The amount of time from the instant the fuse link has melted until the overcurrent is interrupted, or cleared. —(IEC 60127)
Clearing Time	The total time between the beginning of the overcurrent and the final opening of the circuit at rated voltage by an overcurrent protective device. Clearing time is the total of the melting time and the arcing time. —(IEC 60127)
Breaking Capacity of a Fuse-link	Value (r.m.s. for AC) of prospective current that a fuse-link is capable of breaking at a stated voltage under prescribed conditions of use and behaviour. —(IEC 60127)

Miniature Fuses

All Rights Reserved by Xiamen SET Electronics Co., Ltd. 2021-2023 V2.2

ATTENTION

Inspection

Cold Resistance Test

a. Applied current shall be less than 10% of rated current, at ambient Temp. of (23±2) °C.

b. (4-Wire) Resistance Measurement.

Usage

a. Do not touch the fuse body or lead wire when power on, avoiding scald or electric shock.

b. Air pressure is 80 kPa to 106 kPa. These values represent an altitude of +2000 m to -500 m, respectively.

Replacement

For safety reasons, the Fuse is the non-resettable product, please ensure that the alternative Fuse is the same type when replace it.

Storage

Please store the fuse in the environment without high temperature, high humidity or corrosive gas, to avoid reducing the solderability of the lead wire. Please use them up within 1 year after receiving the goods.

Installation Position

Do not install the fuse on a location that may often subject to severe continuous vibration.

All Rights Reserved by Xiamen SET Electronics Co., Ltd. 2021-2023 V2.2

Installation

Mechanical stress

Do not apply mechanical stress to the fuse body during or after the installation.

Wave soldering Parameters (For Reference Only)

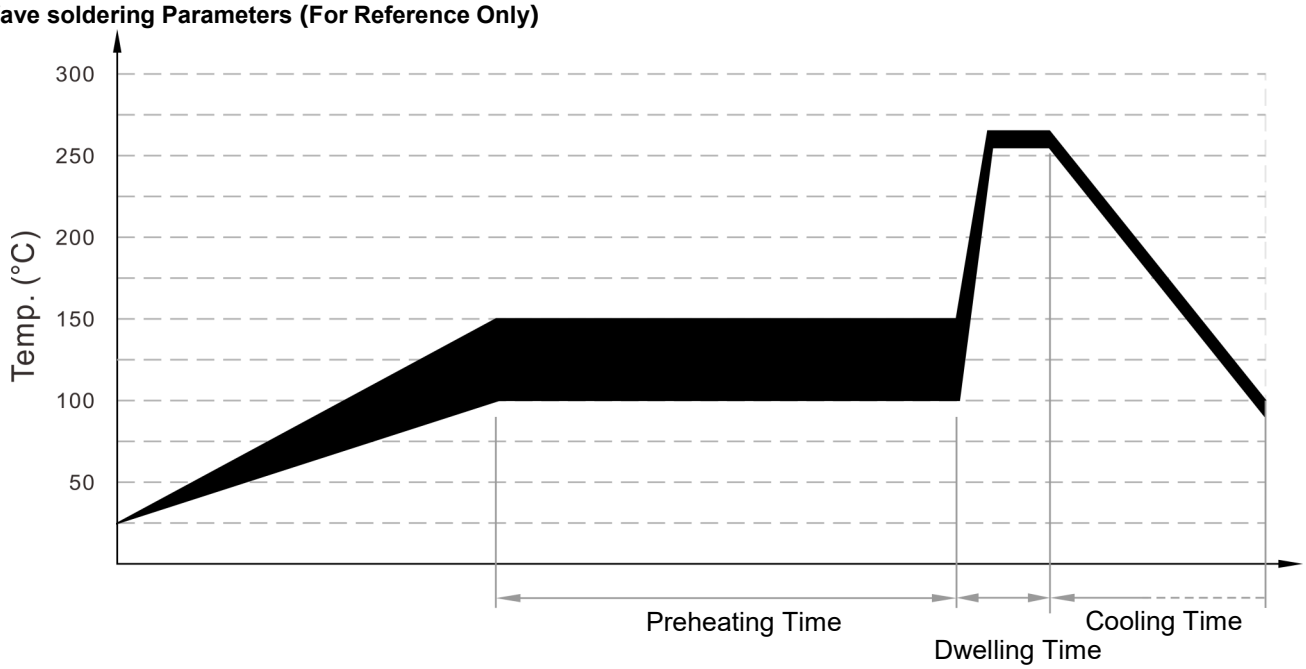

Item	Temp. (°C)	Time (s)
Preheating	100 to 150	60 to 180
Dwelling	260 ± 5	2 to 5

Recommended Hand-Soldering Parameters

Solder Iron Temp.: (350 ± 5) ℃

Heating Time: 5 seconds Max.

Lead Wire Bending

If the lead wire has to be bent, please pay attention to the distance between body and the bending point. Refer to the following table.

Axial Type			
d	≤ Φ1.0 mm	> Φ1.0 mm	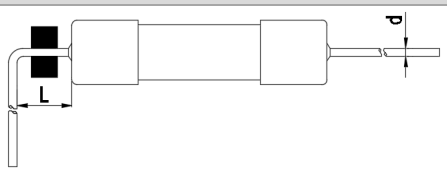
L	≥ 3 mm	≥ 5 mm	
Radial Type			
Dimension (mm)	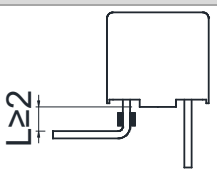		

All Rights Reserved by Xiamen SET Electronics Co., Ltd. 2021-2023 V2.2

Miniature Fuses
(Sub-miniature Fuse-links)

SPF478 Series, Fast Acting, Plastic Case

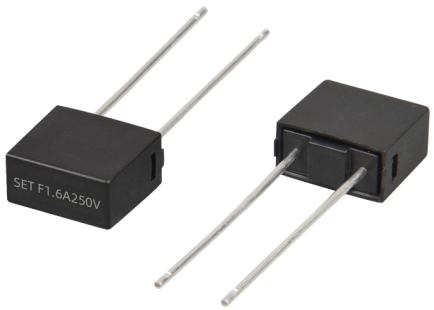

Dimensions (mm)

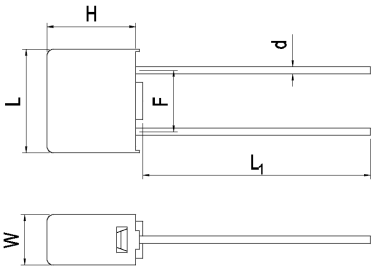

L	L_1	W
8.4 ± 0.5	18.5 ± 1.0	4.1 ± 0.3

H	d	F
7.35 ± 0.50	Φ(0.60 ± 0.05)	5.08 ± 0.20

Description

Sub-miniature fuse, Fast Acting, designed to IEC & UL standards.

Features

- Miniature Size
- Fast Acting
- Designed to IEC 60127-3 Sheet 3, GB/T 9364.3 Sheet 3
- Lead-free (Pb-free)
- RoHS & REACH Compliant

Applications

- Power Supply
- Household Appliance
- General Lighting
- Smart Home
- Office Equipment
- Electric Tool
- Medical Equipment
- Instruments and Apparatuses

Part Numbering System

SPF478F1.25A250VT-001

- Other Options
- T: Taping
- B: Bulk
- Rated Voltage
- Rated Current
- F: Fast Acting
- Product Series

Structure Diagram

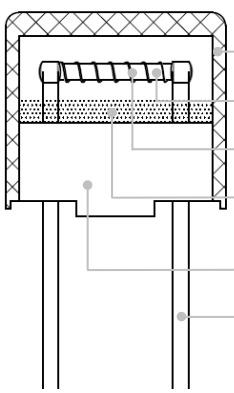

Agency Approvals

Agency Approvals	Agency File Number	Ampere Range (A)
c UL us	Pending	1 to 10
VDE	Pending	1 to 10
CCC	Pending	1 to 10

Time Current Curve (For Reference Only)

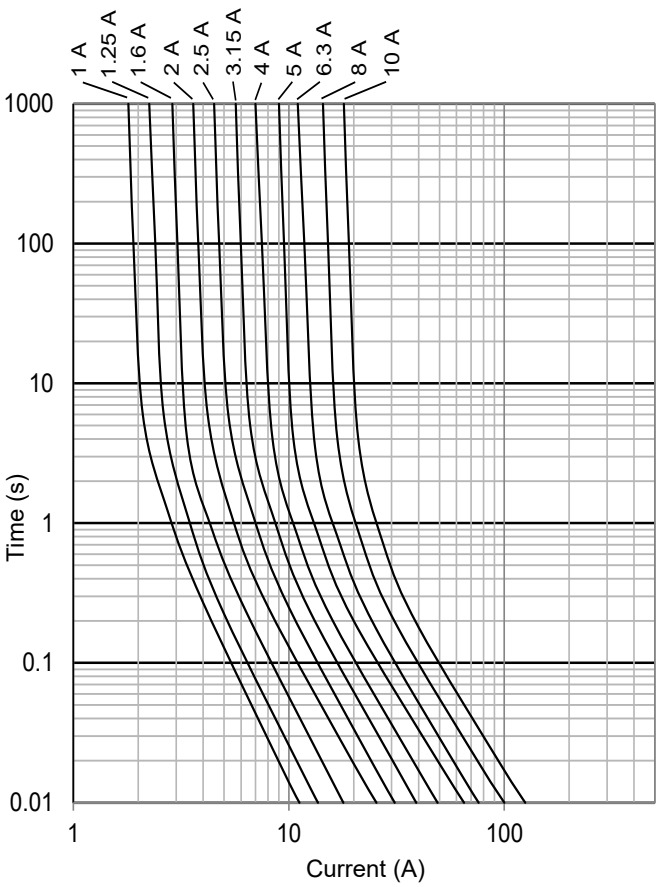

All Rights Reserved by Xiamen SET Electronics Co., Ltd. 2021-2023 V2.2

Specifications

Series	Rated Current	Max. Voltage Drop [a]	Average Typical Melting I^2t [b]	Agency Approvals			Environmental	
				CCC	VDE	cURus	RoHS	REACH
	(A)	(mV)	(A²sec)	CCC	VDE	cURus		
SPF478	1	280	1.4	○	○	○	●	●
SPF478	1.25	280	2.1	○	○	○	●	●
SPF478	1.6	250	3.6	○	○	○	●	●
SPF478	2	240	6.8	○	○	○	●	●
SPF478	2.5	200	11.3	○	○	○	●	●
SPF478	3.15	180	18.9	○	○	○	●	●
SPF478	4	160	27.2	○	○	○	●	●
SPF478	5	150	50	○	○	○	●	●
SPF478	6.3	130	59.5	○	○	○	●	●
SPF478	8	100	103	○	○	○	●	●
SPF478	10	85	170	○	○	○	●	●

a: Max. Voltage Drop (voltage drop is measured at 23 °C ambient temp. at rated current).

b: I^2t value is measured at 10 I_N.

Breaking Capacity:

CCC / VDE: 35 A @ 250 Vac or 10 I_N @ 250 Vac Whichever is Greater

UL / cUL: 150 A @ 125 V / 250 V / 300 V / 350 V / 400 V

○: Pending

Opening Time / Current Characteristic

Rated Current (A)	$2.1I_N$	$2.75I_N$		$4I_N$		$10I_N$
	Max.	Min.	Max.	Min.	Max.	Max.
1 to 5	30 minutes	10 ms	3 s	3 ms	300 ms	20 ms
6.3 to 10	30 minutes	50 ms	10 s	5 ms	400 ms	20 ms

All Rights Reserved by Xiamen SET Electronics Co., Ltd. 2021-2023 V2.2

Packaging Information

Dimensions (mm)

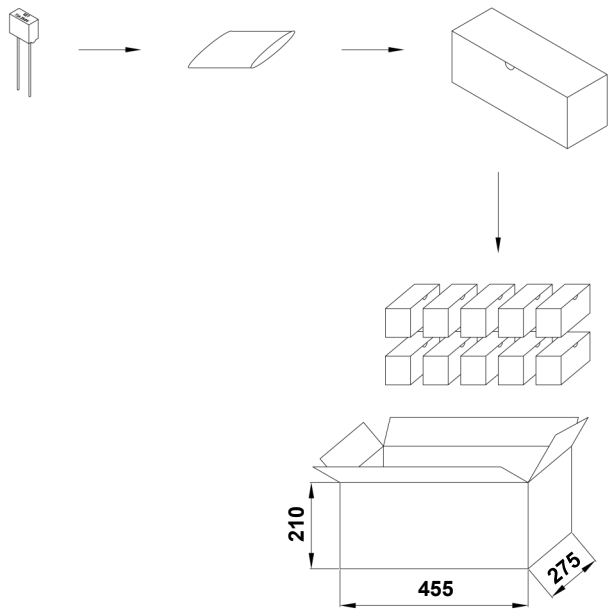

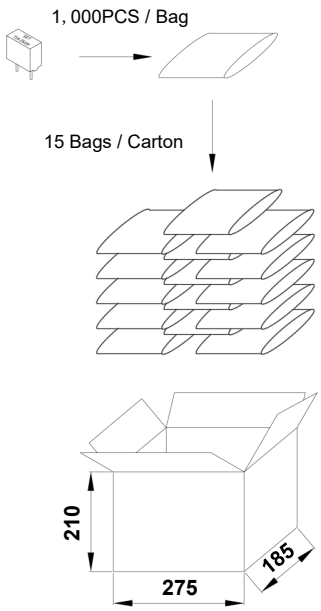

Long Leg			
Item	PE Bag	Box	Carton
Q'ty (PCS)	1,000	2,000	20,000
Gross Weight (kg)		7.6 ± 10%	

Short Leg		
Item	PE Bag	Carton
Q'ty (PCS)	1,000	15,000
Gross Weight (kg)		4.6 ± 10%

Dimensions (mm)

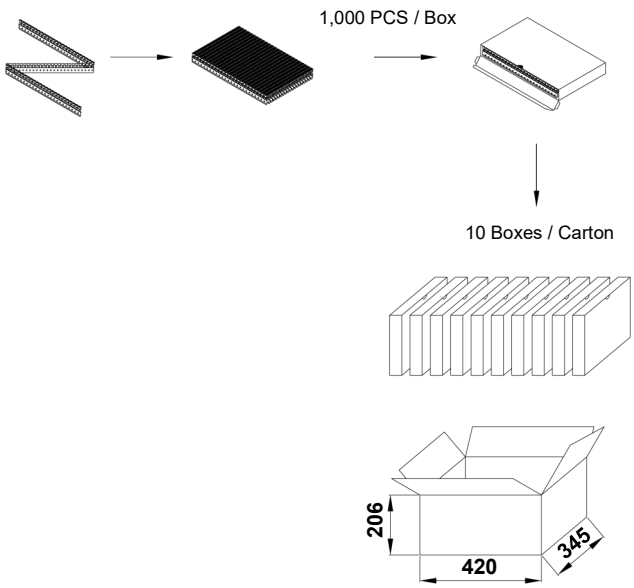

Taping		
Item	Box	Carton
Q'ty (PCS)	1,000	10,000
Gross Weight (kg)		6.0 ± 10%

All Rights Reserved by Xiamen SET Electronics Co., Ltd. 2021-2023 V2.2

Miniature Fuses
(Sub-miniature Fuse-links)

SPT478 Series, Time-Lag, Plastic Case

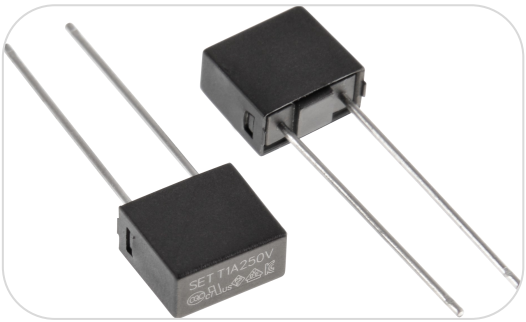

Dimensions (mm)

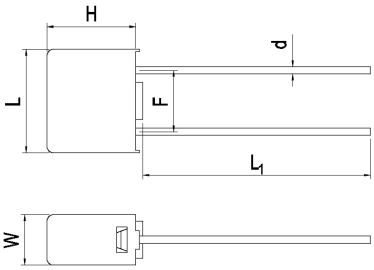

L	L_1	W
8.4 ± 0.5	18.5 ± 1.0	4.1 ± 0.3

H	d	F
7.35 ± 0.50	Φ(0.60 ± 0.05)	5.08 ± 0.20

Description

Sub-miniature fuse, Time-Lag, designed to IEC & UL standards.

Features

- Miniature Size
- Time-Lag
- Designed to IEC 60127-3 Sheet 3, GB/T 9364.3 Sheet 3
- Lead-free (Pb-free)
- RoHS & REACH Compliant

Applications

- Power Supply
- Household Appliance
- General Lighting
- Smart Home
- Office Equipment
- Electric Tool
- Medical Equipment
- Instruments and Apparatuses

Part Numbering System

SPT478T1.25A250VT-001

- Other Options
- T: Taping
- B: Bulk
- Rated Voltage
- Rated Current
- T: Time-lag
- Product Series

Structure Diagram

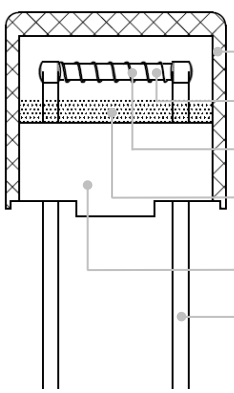

Agency Approvals

Agency Approvals	Agency File Number	Ampere Range (A)
c UL us	E345932	0.1 to 10
VDE	40049409	0.1 to 10
PSE	PSE18021398 PSE18021397	1 to 5 6.3 to 10
CCC	2020980207000070	0.1 to 10
KC	SU05023-18002 SU05023-18005 SU05023-18001 SU05023-18003 SU05023-18004	0.1 0.125 to 0.8 1 to 2.5 3.15 to 6.3 8 to 10

Time Current Curve (For Reference Only)

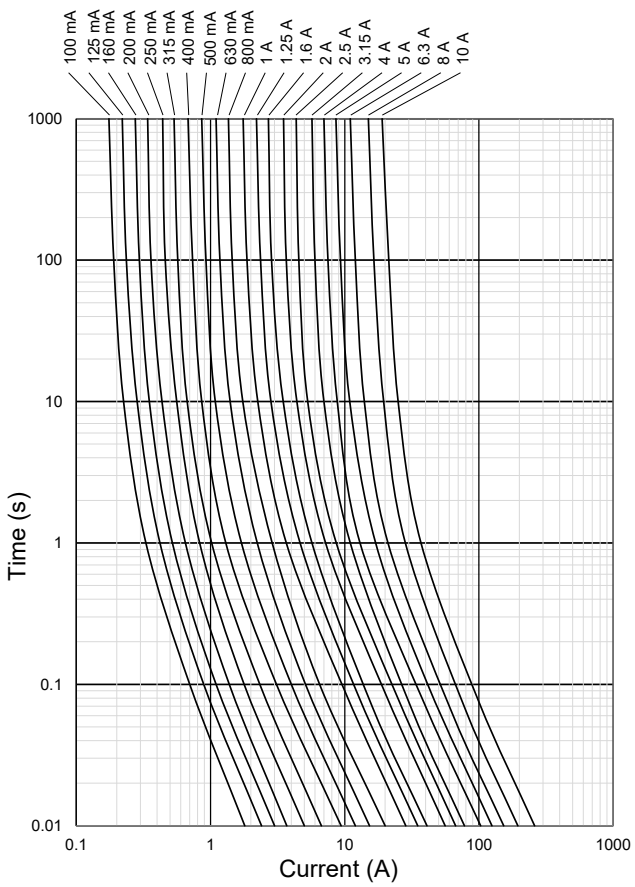

All Rights Reserved by Xiamen SET Electronics Co., Ltd. 2021-2023 V2.2

Miniature Fuses

Specifications

Model	Rated Current	Max. Voltage Drop [a]	Max. Sustained Power Dissipation at 1.5 I_N	Typical Melting I^2t [b]	Agency Approvals					Environmental	
					CCC	VDE	KC	PSE	cURus	RoHS	REACH
	(A)	(mV)	(mW)	(A^2Sec)							
SPT478T100mA	0.1	350	170	0.04	●	●	●		●	●	●
SPT478T125mA	0.125	300	180	0.07	●	●	●		●	●	●
SPT478T160mA	0.16	280	190	0.11	●	●	●		●	●	●
SPT478T200mA	0.2	260	200	0.16	●	●	●		●	●	●
SPT478T250mA	0.25	240	220	0.29	●	●	●		●	●	●
SPT478T315mA	0.315	220	250	0.50	●	●	●		●	●	●
SPT478T400mA	0.4	200	280	0.91	●	●	●		●	●	●
SPT478T500mA	0.5	190	310	1.51	●	●	●		●	●	●
SPT478T630mA	0.63	180	360	2.38	●	●	●		●	●	●
SPT478T800mA	0.8	160	430	3.78	●	●	●		●	●	●
SPT478T1A	1	140	500	9.00	●	●	●	●	●	●	●
SPT478T1.25A	1.25	130	600	13	●	●	●	●	●	●	●
SPT478T1.6A	1.6	120	730	18	●	●	●	●	●	●	●
SPT478T2A	2	100	870	35	●	●	●	●	●	●	●
SPT478T2.5A	2.5	100	1000	49	●	●	●	●	●	●	●
SPT478T3.15A	3.15	100	1200	66	●	●	●	●	●	●	●
SPT478T4A	4	100	1400	112	●	●	●	●	●	●	●
SPT478T5A	5	100	1500	165	●	●	●	●	●	●	●
SPT478T6.3A	6.3	100	1650	250	●	●	●	●	●	●	●
SPT478T8A	8	80	1800	416	●	●	●	●	●	●	●
SPT478T10A	10	75	2000	750	●	●	●	●	●	●	●

a: Max. Voltage Drop (voltage drop is measured at (23 ± 1) °C ambient temp. at rated current).
b: I^2t value is measured at 10 I_N.

Breaking Capacity:

CCC / VDE / PSE / KC: 35 A @ 250 VAC or 10 I_N @ 250 VAC Whichever is Greater

UL / cUL: 150 A @ 125 VAC / 250 VAC / 300 VAC / 350 VAC / 400 VAC

Opening Time / Current Characteristic

Rated Current (A)	2.1I_N	2.75I_N		4I_N		10I_N	
	Max.	Min.	Max.	Min.	Max.	Min.	Max.
0.1 to 6.3	2 minutes	400 ms	10 s	150 ms	3 s	20 ms	150 ms
8 to 10	5 minutes	1 s	20 s	150 ms	3 s	20 ms	150 ms

All Rights Reserved by Xiamen SET Electronics Co., Ltd. 2021-2023 V2.2

Miniature Fuses

Packaging Information

Dimensions (mm)

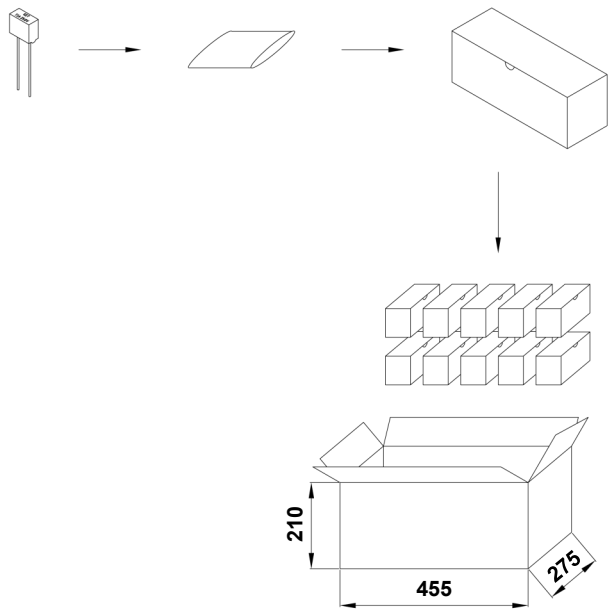

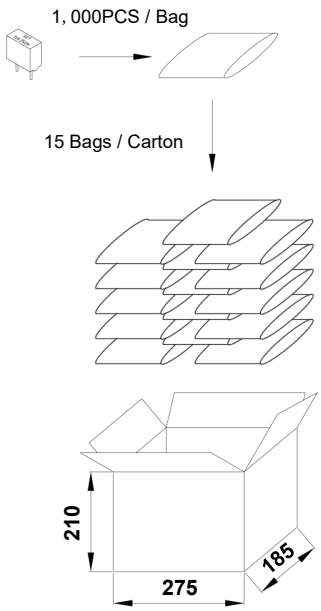

Long Leg			
Item	**PE Bag**	**Box**	**Carton**
Q'ty (PCS)	1,000	2,000	20,000
Gross Weight (kg)		7.6 ± 10%	

Short Leg		
Item	**PE Bag**	**Carton**
Q'ty (PCS)	1,000	15,000
Gross Weight (kg)		4.6 ± 10%

Dimensions (mm)

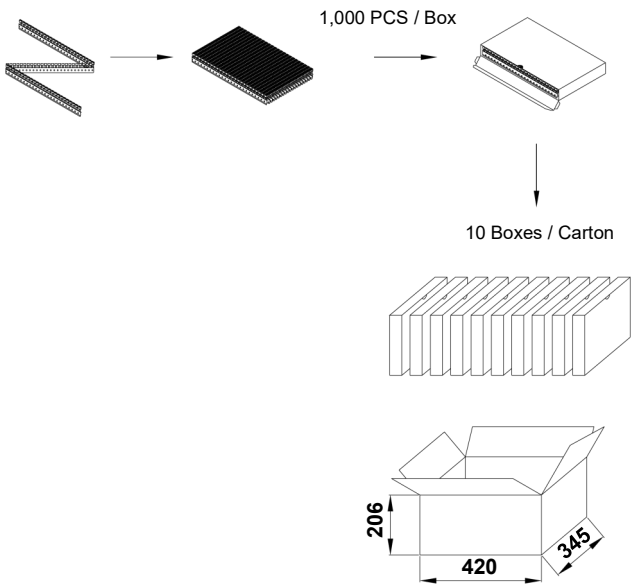

Taping		
Item	**Box**	**Carton**
Q'ty (PCS)	1,000	10,000
Gross Weight (kg)		6.0 ± 10%

All Rights Reserved by Xiamen SET Electronics Co., Ltd. 2021-2023 V2.2

Miniature Fuses
(Surface Mount Fuse-links)

Miniature Fuses

Features

Ceramic Tube

Fast Acting and Time-Lag

Rated Current: (0.1 to 40) A

Rated Voltage: (125 to 350) VAC
(24 to 250) VDC

Low and High Breaking Capacity

Lead-free (Pb-free), RoHS & REACH Compliant

All Rights Reserved by Xiamen SET Electronics Co., Ltd. 2021-2023 V2.2

Miniature Fuses
(Surface Mount Fuse-links)

Surface Mount Fuse-lingks (SMFL) Feature & Model List Overview

Rated Current (A) \ Page	7	10	13	16
50.00	○	○	○	○
40.00	○	○	SCF1032F40A	○
30.00	○	○	SCF1032F30A	○
25.00	○	○	SCF1032F25A	○
21.00	○	○	○	○
20.00	SCF6125F20A	○	SCF1032F20A	○
16.00	SCF6125F16A	○	SCF1032F16A	○
15.00	SCF6125F15A	○	SCF1032F15A	SCT1032T15A
13.00	○	○	○	○
12.50	SCF6125F12.5A	SCT6125T12.5A	SCF1032F12.5A	SCT1032T12.5A
12.00	SCF6125F12A	SCT6125T12A	SCF1032F12A	SCT1032T12A
10.00	SCF6125F10A	SCT6125T10A	SCF1032F10A	SCT1032T10A
8.00	SCF6125F8A	SCT6125T8A	SCF1032F8A	SCT1032T8A
7.00	○	○	○	○
6.30	SCF6125F6.3A	SCT6125T6.3A	SCF1032F6.3A	SCT1032T6.3A
6.00	○	○	○	○
5.00	SCF6125F5A	SCT6125T5A	SCF1032F5A	SCT1032T5A
4.00	SCF6125F4A	SCT6125T4A	SCF1032F4A	SCT1032T4A
3.15	SCF6125F3.15A	SCT6125T3.15A	SCF1032F3.15A	SCT1032T3.15A
3.00	SCF6125F3A	SCT6125T3A	SCF1032F3A	SCT1032T3A
2.50	SCF6125F2.5A	SCT6125T2.5A	SCF1032F2.5A	SCT1032T2.5A
2.00	SCF6125F2A	SCT6125T2A	SCF1032F2A	SCT1032T2A
1.60	SCF6125F1.6A	SCT6125T1.6A	SCF1032F1.6A	SCT1032T1.6A
1.25	○	SCT6125T1.25A	SCF1032F1.25A	SCT1032T1.25A
1.00	○	SCT6125T1A	SCF1032F1A	SCT1032T1A
0.80	○	SCT6125T800mA	○	SCT1032T800mA
0.63	○	SCT6125T630mA	○	SCT1032T630mA
0.50	○	SCT6125T500mA	○	SCT1032T500mA
0.40	○	SCT6125T400mA	○	SCT1032T400mA
0.315	○	SCT6125T315mA	○	SCT1032T315mA
0.25	○	SCT6125T250mA	○	SCT1032T250mA
0.20	○	SCT6125T200mA	○	SCT1032T200mA
0.16	○	○	○	SCT1032T160mA
0.125	○	○	○	SCT1032T125mA
0.10	○	○	○	SCT1032T100mA
$U_{r(VAC)(VDC)}$ Rated Voltage	(125 ~ 350) VAC / (24 ~ 125) VDC		(125 ~ 350) VAC / (32 ~ 250) VDC	
Time Feature	Fast Acting	Time-Lag	Fast Acting	Time-Lag
Tube Material	Ceramic			
Standards	IEC / UL			
Breaking Capacity	50 A ~ 500 A		100 A ~ 1000 A	
Physical Size (mm)	2.7 × 2.7 × 6.3		3.2 × 3.2 × 10.3	
Product Structure	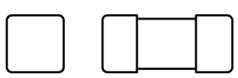		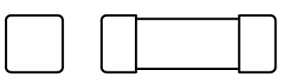	

Model

Miniature Fuses

All Rights Reserved by Xiamen SET Electronics Co., Ltd. 2021-2023 V2.2

Miniature Fuses
(Surface Mount Fuse-links)

Description

Miniature Fuses is an Over Current Protection device. Its resistance is very low. When the circuit works normally, it is equivalent to a wire, which can conduct the circuit continuously and stably. When the current fluctuates due to circuit instability or external interference, it should also be able to withstand a certain range of overload. Only when overload or short circuit happens, Miniature Fuses can blow fast to protect the circuit.

SETsafe | SETfuse Miniature Fuses is widely used in all kinds of electrical equipment. It has a variety of mounting modes, compact structure, reliable and stable performance. Technical parameters of SETsafe | SETfuse Miniature Fuses: Its rated current ranges from 0.1 A to 40 A, rated voltage ranges from 125 VAC to 600 VAC, and from 24 VDC to 600 VDC, complies with RoHS and REACH, and is approved by cURus, VDE, PSE, CCC, CQC, KC, TUV.

Glossary

Item	Description
Fuse	A device, by the fusing of one or more of its specially designed and proportioned components, opens the circuit in which it is inserted by breaking the current when this exceeds a given value for a sufficient time. —(IEC 60127)
Fast Acting Fuse	A fuse which opens on overload and short circuits very quickly. This type of fuse is not designed to withstand temporary overload currents associated with some electrical load. UL listed or recognized fast acting fuses would typically open within 5 s when subjected to 200% to 250% of its rated current. IEC has two categories of fast acting fuses: ● F = Fast acting, opens on 10 times rated current within 0.001 s to 0.01 s. ● FF = Very fast acting, opens on 10 times rated current within less than 0.001 s. —(UL 248)
Time-Lag Fuse	A fuse with a built-in delay that allows temporary and harmless inrush currents to pass without operating. In design, the breaking time under the condition of continuous overload and short-circuit current shall be: UL listed or recognized time delay fuses typically open in 2 minutes Max. when subjected to 200% to 250% of rated current. IEC has two categories of time delay fuses: ● T = Time-Lag, opens on 10 times rated current within 0.01 s to 0.3 s. ● TT = Long Time-Lag, opens on 10 times rated current within 0. 1 s to 1 s. —(UL 248)
Rated Current	The rated current of a fuse identifies its current-carrying capacity based on a controllable set of test conditions. Each fuse is marked with its rated current, this rating can be identified with a numeric, alpha, or color code mark. —(IEC 60127)
Rated Voltage	A Max. open circuit voltage in which a fuse can be used, yet safely interrupt an overcurrent. Exceeding the voltage rating of a fuse impairs its ability to clear an overload or short circuit safely. —(IEC 60127)
RMS Current	The R.M.S. (root mean square) value of any periodic current is equal to the value of the direct current, which flowing through a resistance, produces the same heating effect in the resistance as the periodic current does. —(IEC 60127)

All Rights Reserved by Xiamen SET Electronics Co., Ltd. 2021-2023 V2.2

Glossary

Item	Description
Normal Operating Current	The normal operating current of a circuit is the level of current drawn (in RMS or dc amperes) after it has been energized and is operating under normal conditions. An operating current of 80% or less of rated current is recommended for operation at 25 °C to avoid nuisance openings. For example, a fuse with a Rated Current of 1 A is usually not recommended in circuits with normal operating currents of more than 800 mA. Further derating is required at elevated ambient Temp.. —(UL 248)
Ampere Squared Seconds I^2t	The melting, arcing, or clearing integral of a fuse, termed I^2t, is the thermal energy required to melt, arc, or clear a specific current. It can be expressed as melting I^2t, arcing I^2t or the sum of them, clearing I^2t. —(IEC 60127)
Overload	Can be classified as an overcurrent which exceeds the normal full load current of a circuit by 2 to 5 times its magnitude and stays within the normal current path. —(UL 248)
Overcurrent	A condition which exists in an electrical circuit when the normal load current is exceeded. Overcurrent take on two separate characteristics-overloads and short circuits. —(UL 248)
Short Circuit	An overcurrent that leaves the normal current path and greatly exceeds the normal full load current of the circuit by a factor of tens, hundreds, or thousands times. —(UL 248)
Arcing Time	The amount of time from the instant the fuse link has melted until the overcurrent is interrupted, or cleared. —(IEC 60127)
Clearing Time	The total time between the beginning of the overcurrent and the final opening of the circuit at rated voltage by an overcurrent protective device. Clearing time is the total of the melting time and the arcing time. —(IEC 60127)
Breaking Capacity of a Fuse-link	Value (r.m.s. for AC) of prospective current that a fuse-link is capable of breaking at a stated voltage under prescribed conditions of use and behaviour. —(IEC 60127)

Miniature Fuses

All Rights Reserved by Xiamen SET Electronics Co., Ltd. 2021-2023 V2.2

ATTENTION

Inspection

Cold Resistance Test

a. Applied current shall be less than 10% of rated current, at ambient Temp. of (23±2) °C.

b. (4-Wire) Resistance Measurement.

Usage

a. Do not touch the fuse body or lead wire when power on, avoiding scald or electric shock.

b. Air pressure is 80 kPa to 106 kPa. These values represent an altitude of +2000 m to -500 m, respectively.

Replacement

For safety reasons, the Fuse is the non-resettable product, please ensure that the alternative Fuse is the same type when replace it.

Storage

Please store the fuse in the environment without high temperature, high humidity or corrosive gas, to avoid reducing the solderability of the lead wire. Please use them up within 1 year after receiving the goods.

Installation Position

Do not install the fuse on a location that may often subject to severe continuous vibration.

All Rights Reserved by Xiamen SET Electronics Co., Ltd. 2021-2023 V2.2

Installation

Mechanical stress

Do not apply mechanical stress to the fuse body during or after the installation.

Wave soldering Parameters (For Reference Only)

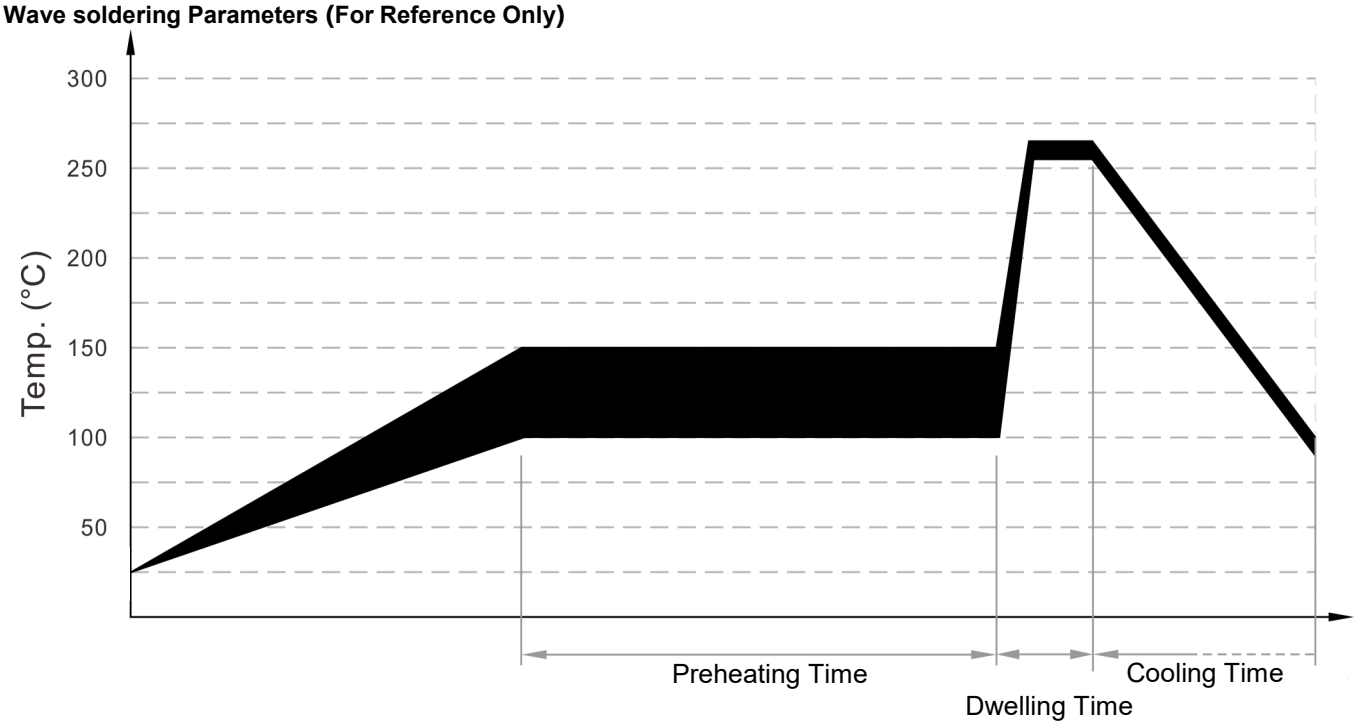

Item	Temp. (°C)	Time (s)
Preheating	100 to 150	60 to 180
Dwelling	260 ± 5	2 to 5

Recommended Hand-Soldering Parameters

Solder Iron Temp.: (350 ± 5) °C

Heating Time: 5 seconds Max.

Lead Wire Bending

If the lead wire has to be bent, please pay attention to the distance between body and the bending point. Refer to the following table.

Axial Type			
d	≤ Φ1.0 mm	> Φ1.0 mm	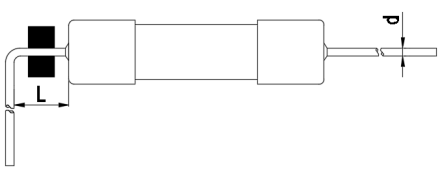
L	≥ 3 mm	≥ 5 mm	
Radial Type			
Dimension (mm)			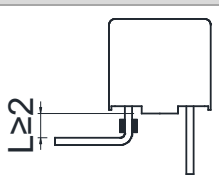

All Rights Reserved by Xiamen SET Electronics Co., Ltd. 2021-2023 V2.2

Miniature Fuses
(Surface Mount Fuse-links)

SCF1032 Series, Fast Acting, Ceramic Tube

Dimensions (mm)

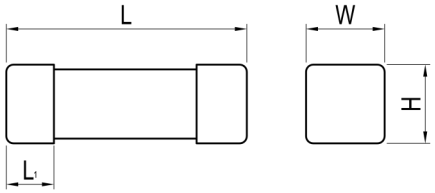

L	L_1	W	H
10.3 ± 0.3	2.0 ± 0.2	3.2 ± 0.3	3.2 ± 0.3

Description

3.2 x 3.2 x 10.3 mm, Fast Acting, SMD fuse, designed to IEC & UL standards.

Features

- 3.2 x 3.2 × 10.3 mm
- Fast Acting
- Designed to IEC 60127-7 / UL248-14
- Lead-free (Pb-free)
- RoHS & REACH Compliant

Applications

- Power Supply
- Household Appliance
- General Lighting
- Smart Home
- Office Equipment
- Electric Tool
- Medical Equipment
- Instruments and Apparatuses

Agency Approvals

Agency Approvals	Agency File Number	Ampere Range (A)
c UL us	E345932	0.5 to 40
TÜVRheinland	Pending	0.5 to 40
cec	Pending	0.5 to 40

Time Current Curve (For Reference Only)

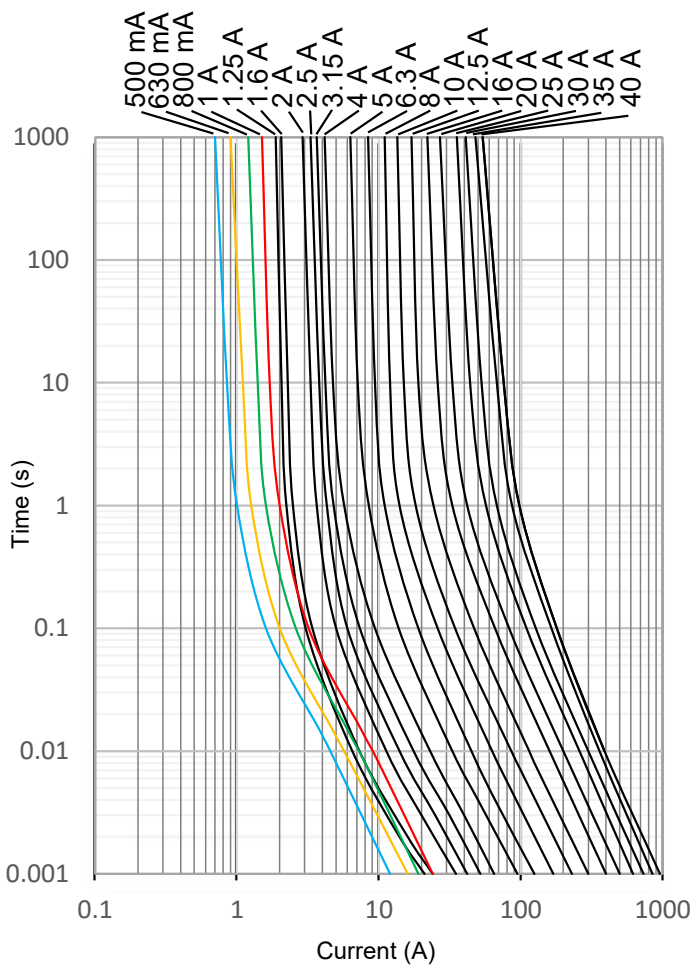

Part Numbering System

SCF1032F1.25A250VT-001

- Other Options
- T: Taping
- B: Bulk
- Rated Voltage
- Rated Current
- F: Fast Acting
- Product Series

Structure Diagram

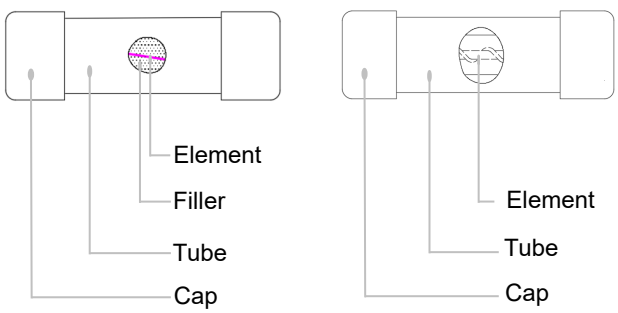

All Rights Reserved by Xiamen SET Electronics Co., Ltd. 2021-2023 V2.2

Miniature Fuses

Specifications

Series	Rated Current (A)	Rated Breaking Capacity	Average Typical Melting I^2t [a] (A²sec)	Agency Approvals TUV	CQC	cURus	Environmental RoHs	REACH
SCF1032	0.5	100 A@250 VAC 100 A@250 VDC 1000 A@125 VAC 1000 A@125 VDC / 75 VDC / 63 VDC / 48 VDC / 32 VDC	0.2	○	○	●	●	●
SCF1032	0.63		0.4	○	○	●	●	●
SCF1032	0.8		0.64	○	○	●	●	●
SCF1032	1		1.2	○	○	●	●	●
SCF1032	1.25		0.2	○	○	●	●	●
SCF1032	1.6		0.5	○	○	●	●	●
SCF1032	2		0.9	○	○	●	●	●
SCF1032	2.5		1.7	○	○	●	●	●
SCF1032	3		2.5			●	●	●
SCF1032	3.15		2.8	○	○	●	●	●
SCF1032	4		5.0	○	○	●	●	●
SCF1032	5		9.5	○	○	●	●	●
SCF1032	6.3		15	○	○	●	●	●
SCF1032	8		38	○	○	●	●	●
SCF1032	10		73	○	○	●	●	●
SCF1032	12		100			●	●	●
SCF1032	12.5		110	○	○	●	●	●
SCF1032	15		225			●	●	●
SCF1032	16		235	○	○	●	●	●
SCF1032	20		400	○	○	●	●	●
SCF1032	25	100 A@125 VAC 100 A@125 VDC	630	○	○	●	●	●
SCF1032	30		850	○	○	●	●	●
SCF1032	35		1200	○	○	●	●	●
SCF1032	40		1500	○	○	●	●	●

a: I^2t value is measured at 10 I_N. ○: Pending

Opening Time / Current Characteristic

Rated Current (A)	1.0 I_N Min.	2.0I_N Max.	10I_N Max.
0.5 to 40	4 Hours	60 s	60 ms

All Rights Reserved by Xiamen SET Electronics Co., Ltd. 2021-2023 V2.2

Packaging Information

All dimensions in mm

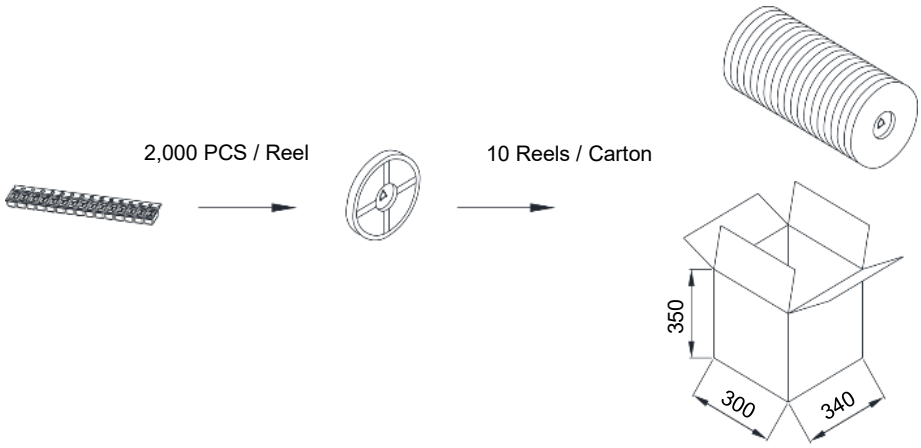

Item	Reel	Carton
Quantity (PCS)	2,000	20,000
Gross Weight (kg)		9.0×(1±10%)

Miniature Fuses

All Rights Reserved by Xiamen SET Electronics Co., Ltd. 2021-2023 V2.2

Miniature Fuses
(Surface Mount Fuse-links)

SCT1032 Series, Time-Lag, Ceramic Tube

Dimensions (mm)

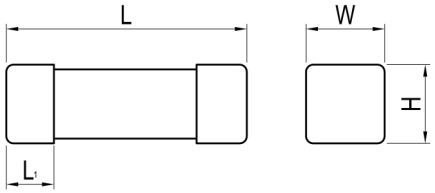

L	L_1	W	H
10.3 ± 0.3	2.0 ± 0.2	3.2 ± 0.3	3.2 ± 0.3

Description

3.2 x 3.2 x 10.3 mm, Time-Lag, SMD fuse, designed to IEC & UL standards.

Features

- 3.2 x 3.2 × 10.3 mm
- Time-Lag
- Designed to IEC 60127-7 / UL248-14
- Lead-free (Pb-free)
- RoHS & REACH Compliant

Applications

- Power Supply
- Household Appliance
- General Lighting
- Smart Home
- Office Equipment
- Electric Tool
- Medical Equipment
- SPD

Part Numbering System

SCT1032T1.25A250VT-001

- Other Options
- T: Taping
- B: Bulk
- Rated Voltage
- Rated Current
- T: Time-Lag
- Product Series

Structure Diagram

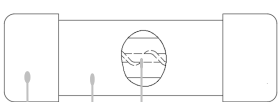

- Element
- Tube
- Cap

Agency Approvals

Agency Approvals	Agency File Number	Ampere Range (A)
c UL us	E345932	0.1 to 15
TÜVRheinland	Pending	0.1 to 15
CQC	CQC22012330354 CQC22012331636	0.1 to 5 6.3 to 15

Time Current Curve (For Reference Only)

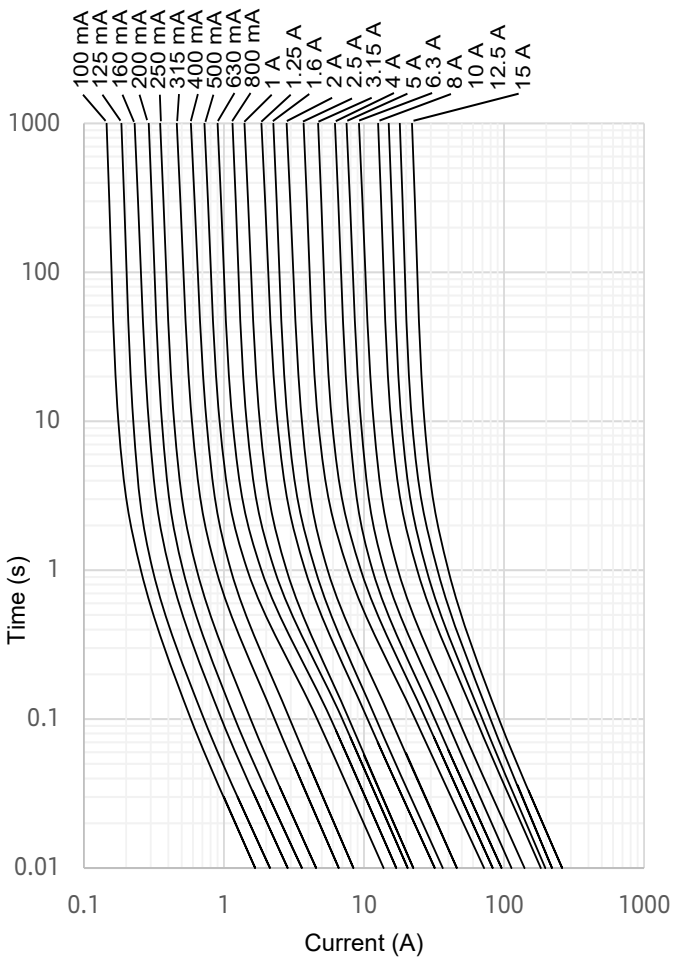

All Rights Reserved by Xiamen SET Electronics Co., Ltd. 2021-2023 V2.2

Miniature Fuses

Specifications

Series	Rated Current (A)	Rated Breaking Capacity	Average Typical Melting I^2t [a] (A²sec)	Agency Approvals: TUV	Agency Approvals: CQC	Agency Approvals: cURus	Environmental: RoHs	Environmental: REACH
SCT1032	0.1	100 A@350 VAC / 300 VAC / 250 VAC / 125 VAC 1000 A@125 VAC 30 A@250 VDC 1000 A@125 VDC / 75 VDC / 63 VDC / 48 VDC / 32 VDC	0.018	○	●	●	●	●
SCT1032	0.125		0.03	○	●	●	●	●
SCT1032	0.16		0.04	○	●	●	●	●
SCT1032	0.2		0.1	○	●	●	●	●
SCT1032	0.25		0.15	○	●	●	●	●
SCT1032	0.315		0.48	○	●	●	●	●
SCT1032	0.4		0.8	○	●	●	●	●
SCT1032	0.5		2.0	○	●	●	●	●
SCT1032	0.63		3.2	○	●	●	●	●
SCT1032	0.8		4.5	○	●	●	●	●
SCT1032	1		5.5	○	●	●	●	●
SCT1032	1.25		10.2	○	●	●	●	●
SCT1032	1.6		14	○	●	●	●	●
SCT1032	2		23	○	●	●	●	●
SCT1032	2.5	100 A@350 VAC / 300 VAC / 250 VAC / 125 VAC 1000 A@125 VAC 1000 A@125 VDC / 75 VDC / 63 VDC / 48 VDC / 32 VDC	52	○	●	●	●	●
SCT1032	3		72			●	●	●
SCT1032	3.15		75	○	●	●	●	●
SCT1032	4		118	○	●	●	●	●
SCT1032	5		197	○	●	●	●	●
SCT1032	6.3		210	○	●	●	●	●
SCT1032	7		290			●	●	●
SCT1032	8		400	○	●	●	●	●
SCT1032	10		445	○	●	●	●	●
SCT1032	12		550			●	●	●
SCT1032	12.5		555	○	●	●	●	●
SCT1032	15		740	○	●	●	●	●

a: I^2t value is measured at 10 I_N. ○: Pending

Opening Time / Current Characteristic

Rated Current (A)	1.0 I_N	2.0I_N	10I_N	
	Min.	Max.	Min.	Max.
0.1 to 15	4 Hours	60 s	10 ms	100 ms

All Rights Reserved by Xiamen SET Electronics Co., Ltd. 2021-2023 V2.2

Packaging Information

All dimensions in mm

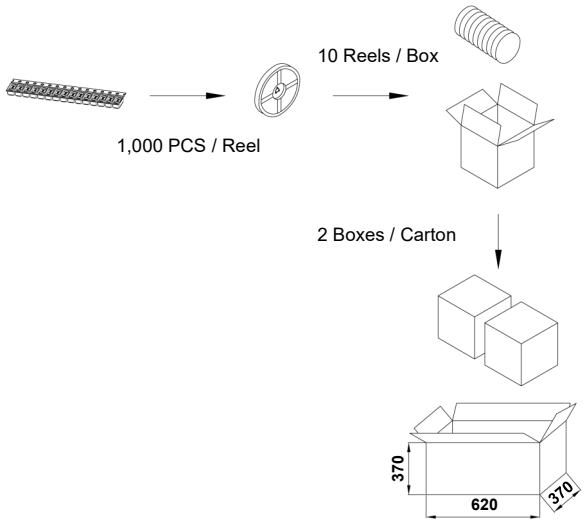

Item	Reel	Box	Carton
Quantity (PCS)	1,000	10,000	20,000
Gross Weight (kg)		9.0×(1±10%)	

Miniature Fuses

All Rights Reserved by Xiamen SET Electronics Co., Ltd. 2021-2023 V2.2

Miniature Fuses
(Surface Mount Fuse-links)

SCF6125 Series, Fast Acting, Ceramic Tube

Dimensions (mm)

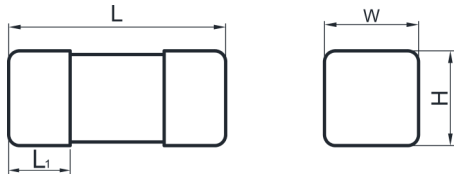

L	L_1	W	H
6.3 ± 0.3	1.7 ± 0.2	2.70 ± 0.25	2.70 ± 0.25

Description

2.7 x 2.7 x 6.3 mm, Fast Acting, SMD fuse, designed to IEC & UL standards.

Features

- 2.7 x 2.7 × 6.3 mm
- Fast Acting
- Designed to IEC 60127-7 / UL248-14
- Lead-free (Pb-Free)
- RoHS & REACH Compliant

Applications

- Power Supply
- Household Appliance
- General Lighting
- Smart Home
- Office Equipment
- Electric Tool
- Medical Equipment
- Instruments and Apparatuses

Part Numbering System

SCF6125F1.25A250VT-001

- Other Options
- T: Taping
- B: Bulk
- Rated Voltage
- Rated Current
- F: Fast Acting
- Product Series

Structure Diagram

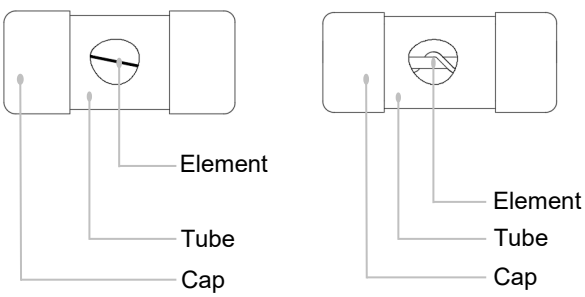

Agency Approvals

Agency Approvals	Agency File Number	Ampere Range (A)
c UL us	E345932	0.5 to 20
TÜVRheinland	Pending	0.5 to 20
cec	Pending	0.5 to 20

Time Current Curve (For Reference Only)

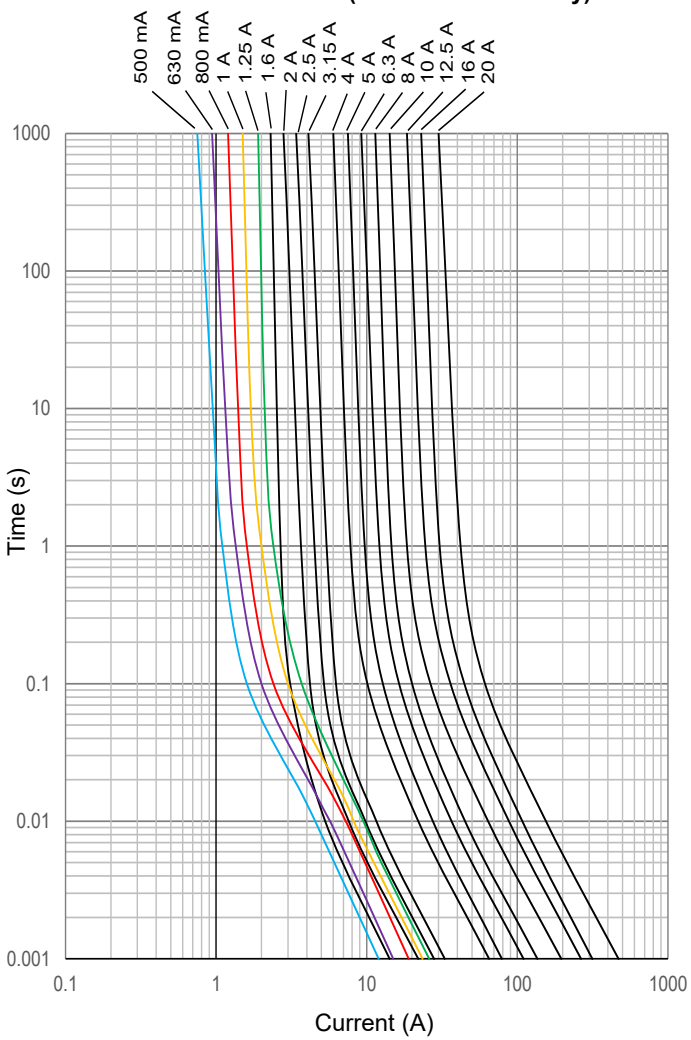

All Rights Reserved by Xiamen SET Electronics Co., Ltd. 2021-2023 V2.2

Miniature Fuses

Specifications

Series	Rated Current (A)	Rated Breaking Capacity	Average Typical Melting I^2t [a] (A²sec)	Agency Approvals: TUV	Agency Approvals: CQC	Agency Approvals: UL/CUL	Environmental: RoHS	Environmental: REACH
SCF6125	0.5	50 A@250 VAC 200 A@125 VAC 200 A@125 VDC 500 A@75 VDC / 63 VDC / 48 VDC / 32 VDC / 24 VDC	0.25	○	○	●	●	●
SCF6125	0.63		0.32	○	○	●	●	●
SCF6125	0.8		0.77	○	○	●	●	●
SCF6125	1		0.8	○	○	●	●	●
SCF6125	1.25		0.78	○	○	●	●	●
SCF6125	1.6		1.28	○	○	●	●	●
SCF6125	2		3.2	○	○	●	●	●
SCF6125	2.5		0.85	○	○	●	●	●
SCF6125	3		0.9	○	○	●	●	●
SCF6125	3.15		1.1	○	○	●	●	●
SCF6125	4		4.5	○	○	●	●	●
SCF6125	5		6.3	○	○	●	●	●
SCF6125	6.3		12.4	○	○	●	●	●
SCF6125	8		19.2	○	○	●	●	●
SCF6125	10		40	○	○	●	●	●
SCF6125	12.5		75	○	○	●	●	●
SCF6125	15		90	○	○	●	●	●
SCF6125	16		102	○	○	●	●	●
SCF6125	20		240	○	○	●	●	●

a: I^2t value is measured at 10 I_N.

○: Pending

Opening Time / Current Characteristic

Rated Current (A)	1.0 I_N	2.0I_N	10I_N
	Min.	Max.	Max.
0.5 to 20	4 Hours	5 s	10 ms

All Rights Reserved by Xiamen SET Electronics Co., Ltd. 2021-2023 V2.2

Miniature Fuses

Packaging Information

All dimensions in mm

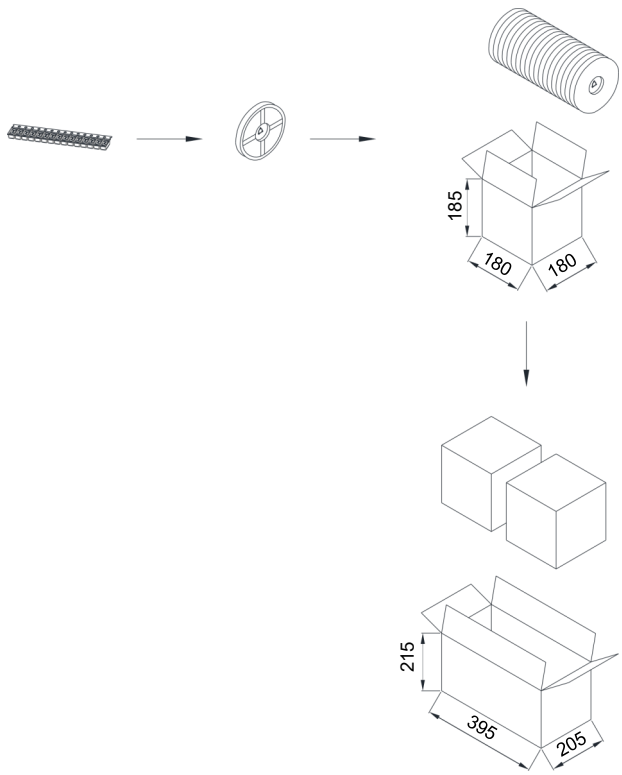

Item	Reel	Box	Carton
Quantity (PCS)	1,000	10,000	20,000
Gross Weight (kg)		4.7×(1±10%)	

Miniature Fuses

All Rights Reserved by Xiamen SET Electronics Co., Ltd. 2021-2023 V2.2

Miniature Fuses
(Surface Mount Fuse-links)

SCT6125 Series, Time-Lag, Ceramic Tube

Dimensions (mm)

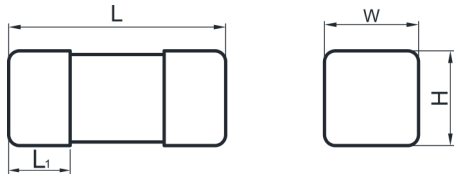

L	L_1	W	H
6.3 ± 0.3	1.7 ± 0.2	2.70 ± 0.25	2.70 ± 0.25

Description

2.7 x 2.7 x 6.3 mm, Time-Lag, SMD fuse, designed to IEC & UL standards.

Features

- 2.7 x 2.7 × 6.3 mm
- Time-Lag
- Designed to IEC 60127-7 / UL248-14
- Lead-free (Pb-free)
- RoHS & REACH Compliant

Applications

- Power Supply
- Household Appliance
- General Lighting
- Smart Home
- Office Equipment
- Electric Tool
- Medical Equipment
- SPD

Part Numbering System

SCT6125T1.25A250VT-001

- Other Options
- T: Taping
- B: Bulk
- Rated Voltage
- Rated Current
- T: Time-lag
- Product Series

Structure Diagram

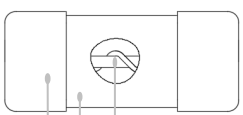

- Element
- Tube
- Cap

Agency Approvals

Agency Approvals	Agency File Number	Ampere Range (A)
c UL us	E345932	0.2 to 12.5
TÜVRheinland	Pending	0.2 to 12.5
cqc	CQC22012331770 CQC22012331771 CQC22012331772	0.2 to 12.5

Time Current Curve (For Reference Only)

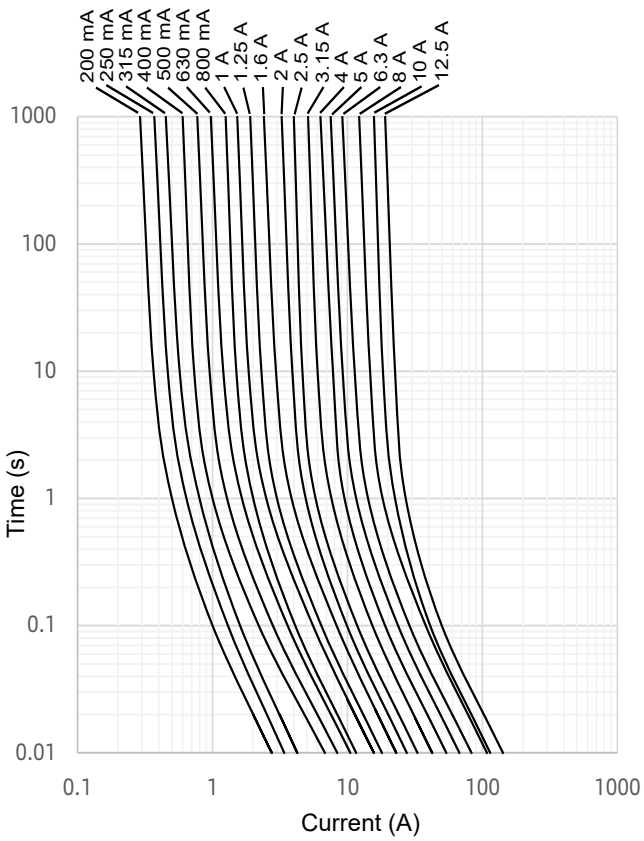

All Rights Reserved by Xiamen SET Electronics Co., Ltd. 2021-2023 V2.2

Miniature Fuses

Specifications

Series	Rated Current (A)	Rated Breaking Capacity	Average Typical Melting I^2t [a] (A²sec)	Agency Approvals: TUVRheinland TUV	Agency Approvals: CQC	Agency Approvals: UL/CUL	Environmental: RoHS	Environmental: REACH
SCT6125	0.2	35 A@350 VAC / 300 VAC / 250 VAC / 125 VAC 50 A@250 VAC / 125 VAC 500 A@125 VAC 500 A@125 VDC 1000 A@75 VDC / 63 VDC / 48 VDC / 32 VDC	0.06	○	●	●	●	●
SCT6125	0.25		0.11	○	●	●	●	●
SCT6125	0.315		0.23	○	●	●	●	●
SCT6125	0.4		0.45	○	●	●	●	●
SCT6125	0.5		0.7	○	●	●	●	●
SCT6125	0.63		1.3	○	●	●	●	●
SCT6125	0.8		1.4	○	●	●	●	●
SCT6125	1		2.5	○	●	●	●	●
SCT6125	1.25		3.4	○	●	●	●	●
SCT6125	1.6		5.5	○	●	●	●	●
SCT6125	2		10.4	○	●	●	●	●
SCT6125	2.5		20	○	●	●	●	●
SCT6125	3.15		22	○	●	●	●	●
SCT6125	4		43	○	●	●	●	●
SCT6125	5		55	○	●	●	●	●
SCT6125	6.3	50 A@250 VAC / 125 VAC 500 A@125 VAC 500 A@125 VDC 1000 A@75 VDC / 63 VDC / 48 VDC / 32 VDC	87	○	●	●	●	●
SCT6125	7		112			●	●	●
SCT6125	8		141	○	●	●	●	●
SCT6125	10		170	○	●	●	●	●
SCT6125	12		205			●	●	●
SCT6125	12.5		203	○	●	●	●	●

a: I^2t value is measured at 10 I_N.

○: Pending

Opening Time / Current Characteristic

Rated Current (A)	1.0 I_N	2.0I_N	10I_N	
	Min.	Max.	Min.	Max.
0.2 to 12.5	4 Hours	60 s	10 ms	100 ms

All Rights Reserved by Xiamen SET Electronics Co., Ltd. 2021-2023 V2.2

Miniature Fuses

Packaging Information

All dimensions in mm

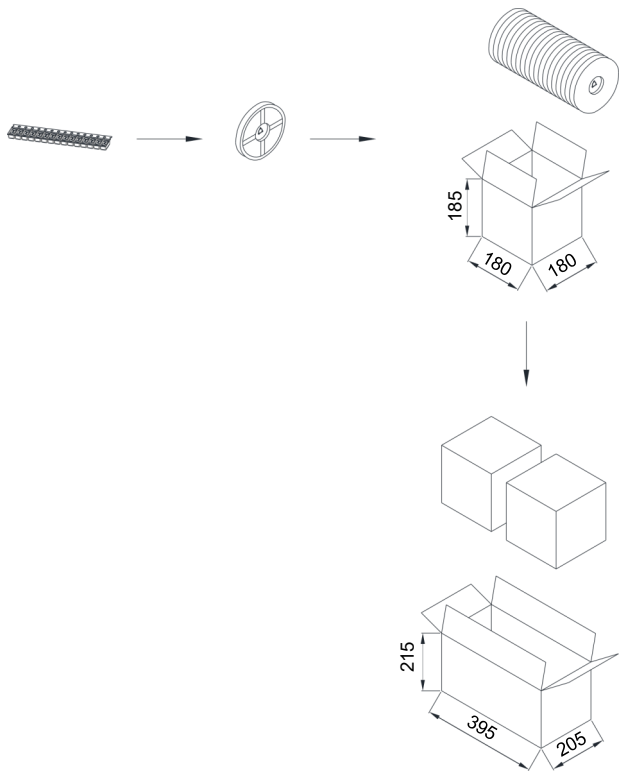

Item	Reel	Box	Carton
Quantity (PCS)	1,000	10,000	20,000
Gross Weight (kg)		4.7×(1±10%)	

Miniature Fuses

All Rights Reserved by Xiamen SET Electronics Co., Ltd. 2021-2023 V2.2

21

21 YEARS OF DESIGNING, MANUFACTURING AND SELLING OF CIRCUIT PROTECTION COMPONENTS

>40

SOLD TO MORE THAN 40 COUNTRIES AND REGIONS

Automatic

AUTOMATIC PROCESS PRODUCTION

500

A BRAND CHOSEN BY FORTUNE 500 COMPANIES

INNOVATIVE DESIGN
ORIGINAL MANUFACTURING
WORLD-CLASS MANUFACTURING

NO. 8067, 8001 West Xiang'an Road,Torch High-tech industrial District,Xiang'an 361101 Xiamen P.R. China
www.SETsafe.com www.SETfuse.com
Tel:+ 86-592-5715-838 sales@SETfuse.com

SET safe | SET fuse

All Rights Reserved by Xiamen SET Electronics Co., Ltd. 2021-2023