Sub-miniature Fuse-links

SFL

- Plastic Case
- Low Breaking Capacity
- Fast Acting and Time-Lag
- Rated Current: (0.1 ~ 20) A
- Rated Voltage: (125 ~ 400) VAC
- Lead-free (Pb-free), RoHS & REACH Compliant

Please refer to the datasheet of each series.

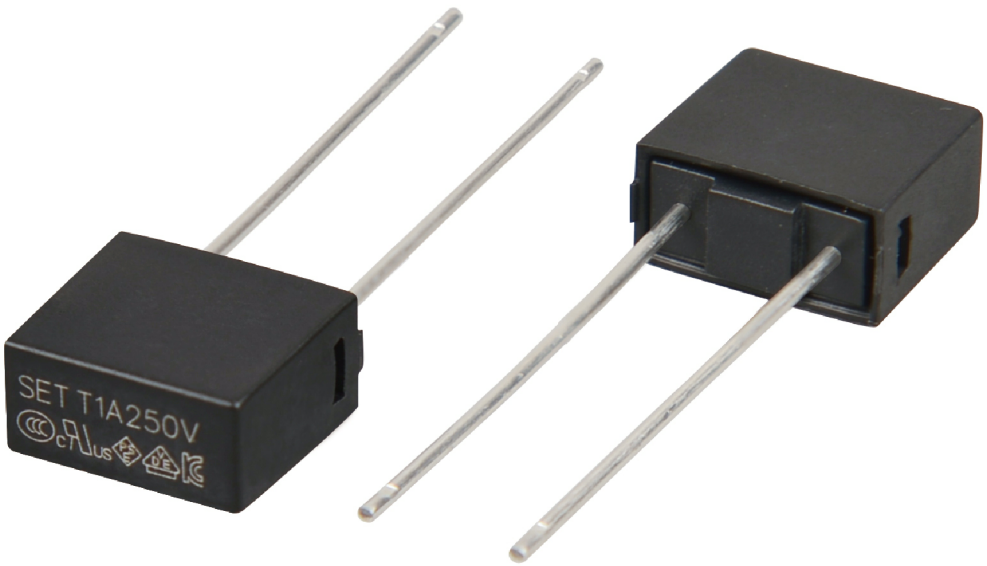

https://setsafe.com/Product/Over-Current-Protection/Sub-miniature-Fuse-links-SFL.html

2024

SET safe | SET fuse

Providing a Total Solution for High Standard Safety Circuit Protection

Sub-miniature Fuse-links (SFL)

Sub-miniature Fuse-links (SFL) is a type of overcurrent protection electronic component. It is in series in the circuit, generally requires small resistance (small power consumption), when the circuit is working normally, it is equivalent to a wire, can lead the power line stably for a long time; When the circuit is unstable or external interference caused by current fluctuations, it should also be able to withstand a certain range of overload or pulse current; Only when there is an obvious overload or short circuit in the circuit, the SFL will act to protect the circuit by cutting off the current.

SFL is widely used in power supply, home appliances, general lighting, smart home, office equipment, power tools, medical equipment, instrumentation, AC charging pile, micro inverter and other fields of overcurrent protection, with small size, compact structure, good breaking ability, stable and reliable performance.

Technical specifications of Sub-miniature Fuse-links (SFL) available from SETsafe | SETfuse: rated current (0.1~20) A, rated voltage (125~400) VAC, agency approvals including cURus, VDE, KC, CCC, PSE, TUV, and meet RoHS, REACH requirements.

All Rights Reserved by Xiamen SET Electronics Co., Ltd. 2024-2026 V1.2

Catalogue

1 Feature & Model List Overview 3
2 Glossary 4
3 Reliability Test 5
4 Attention 6
5 Product Series 8
5.1 SPF478 Series 8
5.2 SPT478 Series 12

All Rights Reserved by Xiamen SET Electronics Co., Ltd. 2024-2026 V1.2

Miniature Fuses

Sub-miniature Fuse-links (SFL)

Sub-miniature Fuse-links (SFL) Feature & Model List Overview

Rated Current I_n (A) \ Model	8	12
50.00	○	○
40.00	○	○
30.00	○	○
25.00	○	○
21.00	○	○
20.00	○	SPT478T20A
16.00	○	SPT478T16A
15.00	○	SPT478T15A
13.00	○	○
12.50	○	SPT478T12.5A
12.00	○	○
10.00	SPF478F10A	SPT478T10A
8.00	SPF478F8A	SPT478T8A
7.00	○	○
6.30	SPF478F6.3A	SPT478T6.3A
6.00	○	○
5.00	SPF478F5A	SPT478T5A
4.00	SPF478F4A	SPT478T4A
3.15	SPF478F3.15A	SPT478T3.15A
3.00	○	○
2.50	SPF478F2.5A	SPT478T2.5A
2.00	SPF478F2A	SPT478T2A
1.60	SPF478F1.6A	SPT478T1.6A
1.25	SPF478F1.25A	SPT478T1.25A
1.00	SPF478F1A	SPT478T1A
0.80	○	SPT478T800mA
0.63	○	SPT478T630mA
0.50	○	SPT478T500mA
0.40	○	SPT478T400mA
0.315	○	SPT478T315mA
0.25	○	SPT478T250mA
0.20	○	SPT478T200mA
0.16	○	SPT478T160mA
0.125	○	SPT478T125mA
0.10	○	SPT478T100mA
U_r Rated Voltage (VAC) (VDC)	(125 ~ 400) VAC	
Time Feature	Fast Acting	Time-Lag
Tube Material	Plastic Case	
Standards	IEC / UL	
Breaking Capacity	35 A ~ 200 A	
Physical Size (mm)	4 × 7 × 8	
Product Structure	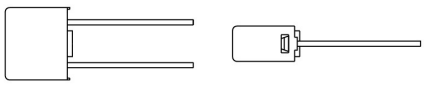	

Page

Remark: Please refer to each product series specification page for complete models

All Rights Reserved by Xiamen SET Electronics Co., Ltd. 2024-2026 V1.2

Glossary

Item	Description
Fuse	A device, by the fusing of one or more of its specially designed and proportioned components, opens the circuit in which it is inserted by breaking the current when this exceeds a given value for a sufficient time. —(IEC 60127)
Rated Current	The rated current of a fuse identifies its current-carrying capacity based on a controllable set of test conditions. Each fuse is marked with its rated current, this rating can be identified with a numeric, alpha, or color code mark. —(IEC 60127)
Rated Voltage	A Max. open circuit voltage in which a fuse can be used, yet safely interrupt an overcurrent. Exceeding the voltage rating of a fuse impairs its ability to clear an overload or short circuit safely. —(IEC 60127)
Ampere Squared Seconds I^2t	The melting, arcing, or clearing integral of a fuse, termed I^2t, is the thermal energy required to melt, arc, or clear a specific current. It can be expressed as melting I^2t, arcing I^2t or the sum of them, clearing I^2t. —(IEC 60127)
Overload	Can be classified as an overcurrent which exceeds the normal full load current of a circuit by 2 to 5 times its magnitude and stays within the normal current path. —(UL 248)
Overcurrent	A condition which exists in an electrical circuit when the normal load current is exceeded. Overcurrent take on two separate characteristics-overloads and short circuits. —(UL 248)
Short Circuit	An overcurrent that leaves the normal current path and greatly exceeds the normal full load current of the circuit by a factor of tens, hundreds, or thousands times. —(UL 248)
Breaking Capacity of a Fuse-link	Value (r.m.s. for AC) of prospective current that a fuse-link is capable of breaking at a stated voltage under prescribed conditions of use and behaviour. —(IEC 60127)

All Rights Reserved by Xiamen SET Electronics Co., Ltd. 2024-2026 V1.2

Reliability Test

No.	Items	Inspection Standards	Standards
1	High Temp. Test	Test Condition: Temperature: (105 ± 2) °C Time: 1000 hours Test Requirement: After the test, the voltage drop shall not have changed by more than 10% of the value measured before the test. The clearing time of the fuse shall be in range.	MIL-STD-202(Test Method 108) GJB360B(Test Method 108)
2	High Humidity Test	Test Condition: Temperature: (40 ± 2) °C Humidity: 90% to 95% Time: 96 hours Test Requirement: After the test, the voltage drop shall not have changed by more than 10 % of the value measured before the test. The clearing time of the fuse shall be in range.	MIL-STD-202(Test Method 103) GJB360B(Test Method 103)
3	Thermal Shock Test	Test Condition: Per Cycle: -55 °C / 30 minutes, 125 °C / 30 minutes Time: 100 Cycles Test Requirement: After the test, the voltage drop shall not have changed by more than 10 % of the value measured before the test. The clearing time of the fuse shall be in range.	MIL-STD-202(Test Method 107) GJB360B(Test Method 107)

All Rights Reserved by Xiamen SET Electronics Co., Ltd. 2024-2026 V1.2

ATTENTION

Inspection

Cold Resistance Test

a. Applied current shall be less than 10% of rated current, at ambient Temp. of (23±2) °C.

b. 4-Wire Resistance Measurement.

Usage

a. Do not touch the fuse body or lead wire when power on, avoiding scald or electric shock.

b. The air pressure is 80 kPa to 106 kPa, corresponding to the altitude of +2000 m to -500 m.

Replacement

For safety reasons, the Fuse is a non-resettable product, please ensure that the alternative Fuse is the same type when replace it.

Storage

Fuse storage should avoid high temperature, high humidity, direct sunlight, and corrosive gases, so as not to affect the solderability of the lead wire. Please use them up within 1 year after receiving the goods.

Installation

Do not apply mechanical stress to the fuse body during or after the installation.

Installation Position

Do not install the fuse on an assembly that may often subject to severe continuous vibration or with corrosive gases (NH_3, SO_2, Cl_2 etc.).

All Rights Reserved by Xiamen SET Electronics Co., Ltd. 2024-2026 V1.2

Soldering Parameters

Wave soldering Parameters (For Reference Only)

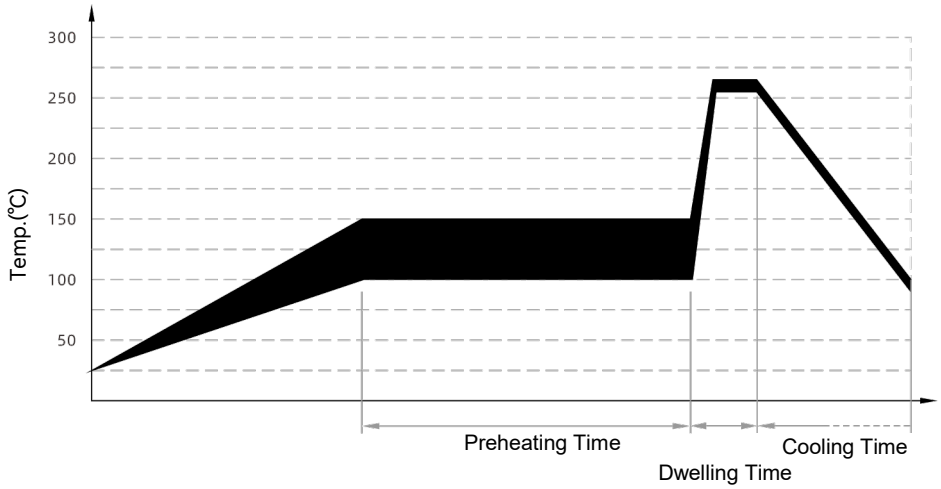

Item	Temp. (°C)	Time (second)
Preheating	100 ~ 150	60 ~ 180
Dwelling	255 ~ 265	4 ~ 8

Recommended Soldering Parameters

Solder Iron Temp.: (350 ± 5)°C

Soldering Time: 5 seconds, Max.

Lead Wire Bending

If the lead wire has to be bent, please pay attention to the distance between body and the bending point. Refer to the following table.

Radial Type
Dimension (mm) 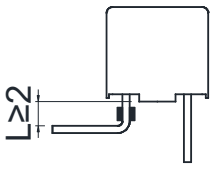

All Rights Reserved by Xiamen SET Electronics Co., Ltd. 2024-2026 V1.2

Miniature Fuses

Sub-miniature Fuse-links (SFL)

SPF478 Series, Fast Acting, Plastic Case

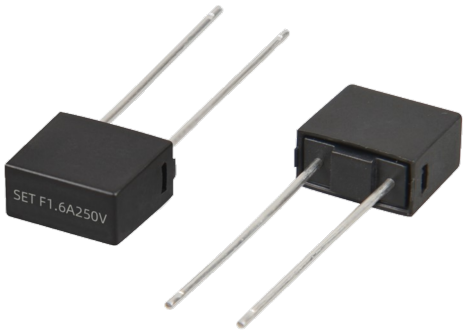

Dimensions (mm)

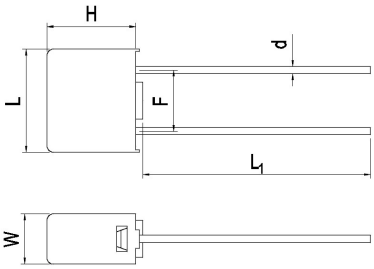

L	L_1	W
8.4 ± 0.5	18.5 ± 1.0	4.1 ± 0.3

H	d	F
7.35 ± 0.50	0.60 ± 0.05	5.08 ± 0.20

Description

Sub-miniature fuse, Fast Acting, Plastic Case, designed to IEC, GB/T and UL standards.

Features

- Miniature Size
- Fast Acting
- Designed to IEC 60127-3 Sheet 3 / IEC 9364.3 Sheet 3 / UL 248-14
- Lead-free (Pb-free)
- RoHS and REACH Compliant

Applications

- Power Supply
- Household Appliance
- General Lighting
- Smart Home
- Office Equipment
- Electric Tool
- Medical Equipment
- Instruments and Apparatuses

Part Numbering System

SPF478 F1.25A250VT-001

- **Other Options**
- **Packaging**
  T: Taping
  B: Bulk
- **Rated Voltage**
- **Rated Current**
- **Pre-Arcing Time/Current Characteristic**
  F: Fast-Acting
- **Product Series**

Structure Diagram

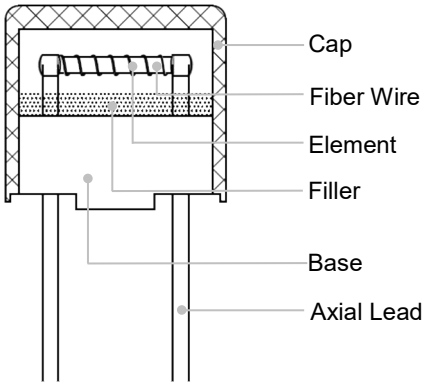

Time/Current Characteristic

% of Ampere Rating	Ampere Rating	Opening Time
210%	1 A ~ 10 A	30 minutes, Max.
275%	1 A ~ 5 A	0.01 s ~ 3 s
	6.3 A ~ 10 A	0.05 s ~ 10 s
400%	1 A ~ 5 A	0.003 s ~ 0.3 s
	6.3 A ~ 10 A	0.005 s ~ 0.4 s
1000%	1 A ~ 10 A	0.02 s, Max.

Agency Approvals

Agency Symbol	The file No. and certification No. obtained by SETsafe|SETfuse	Ampere Range
c UL us	Pending	1 A ~ 10 A
VDE	Pending	1 A ~ 10 A
CCC	Pending	1 A ~ 10 A

All Rights Reserved by Xiamen SET Electronics Co., Ltd. 2024-2026 V1.2

Specifications

Series	Rated Current	Max. Voltage Drop [a]	Average Typical Melting I^2t [b]	Agency Approvals			Environmental	
				CCC	VDE	cURus	RoHS	REACH
	(A)	(mV)	(A^2sec)	CCC	VDE	cURus		
SPF478	1	280	1.4	○	○	○	●	●
SPF478	1.25	280	2.1	○	○	○	●	●
SPF478	1.6	250	3.6	○	○	○	●	●
SPF478	2	240	6.8	○	○	○	●	●
SPF478	2.5	200	11	○	○	○	●	●
SPF478	3.15	180	19	○	○	○	●	●
SPF478	4	160	27	○	○	○	●	●
SPF478	5	150	50	○	○	○	●	●
SPF478	6.3	130	60	○	○	○	●	●
SPF478	8	100	103	○	○	○	●	●
SPF478	10	85	170	○	○	○	●	●

Remark:

a: Max. Voltage Drop (voltage drop was measured at 23 °C ambient temp. at rated current).

b: I^2t value is measured at 10 I_N.

Breaking Capacity:

IEC Standard: 35 A @ 250 Vac or 10 I_N @ 250 Vac whichever is greater.

UL Standard: 150 A @ 125 V / 250 V / 300 V / 350 V / 400 V.

○: Pending.

RoHS and REACH Compliant.

All Rights Reserved by Xiamen SET Electronics Co., Ltd. 2024-2026 V1.2

Time Current Curve (For Reference Only)

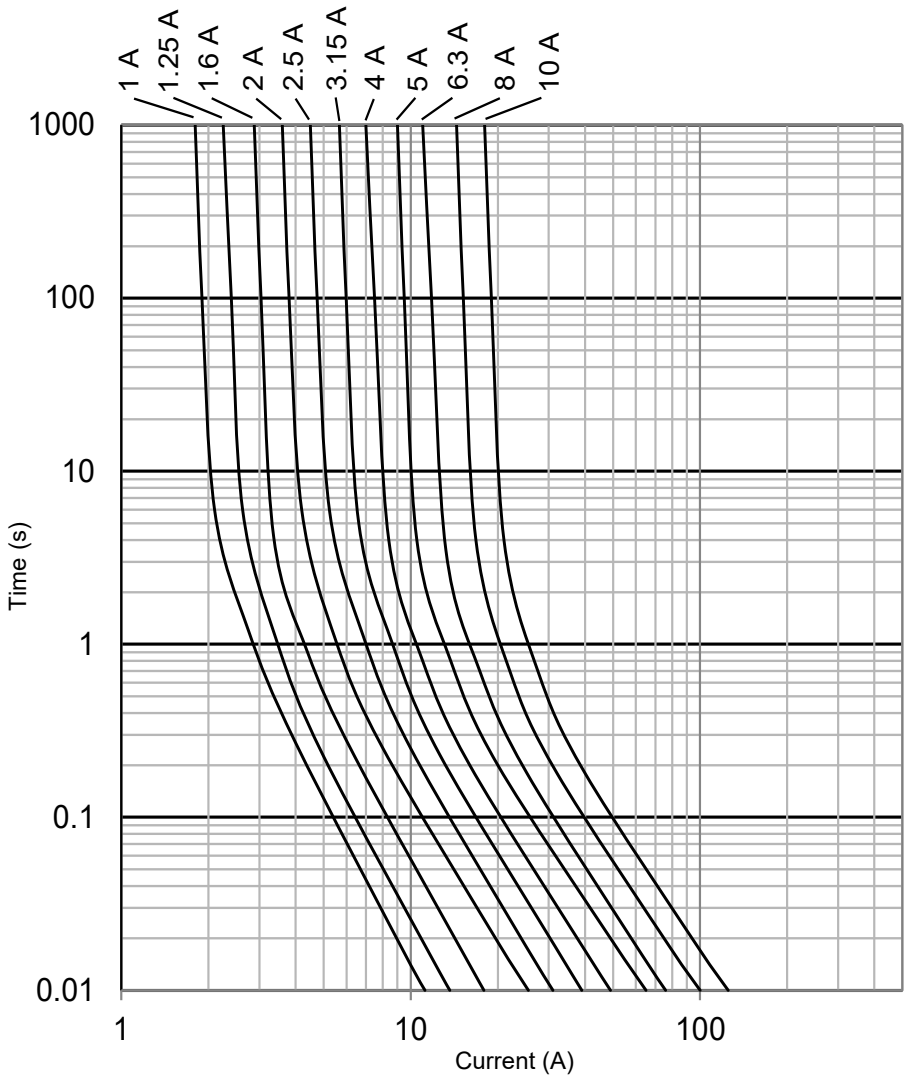

Rated Current Derating Curve（For Reference Only）

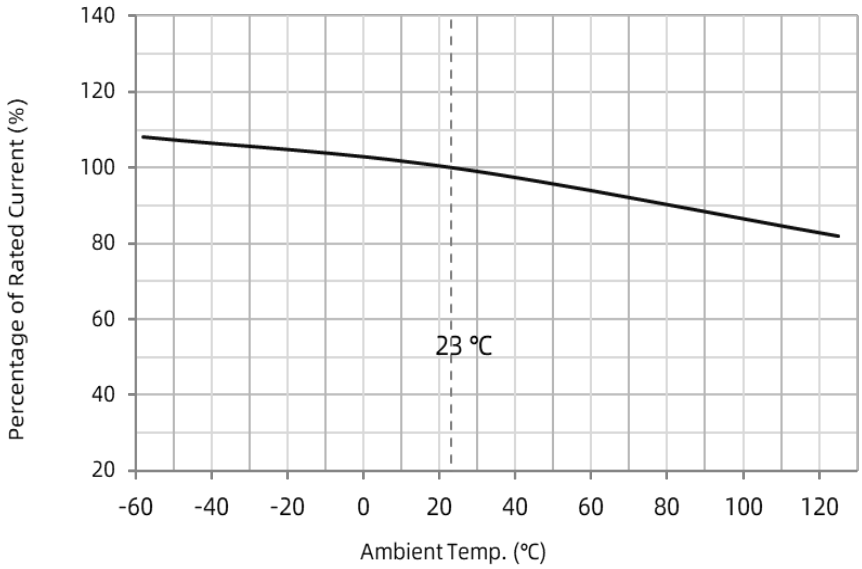

All Rights Reserved by Xiamen SET Electronics Co., Ltd. 2024-2026 V1.2

Packaging Information

All dimensions in mm

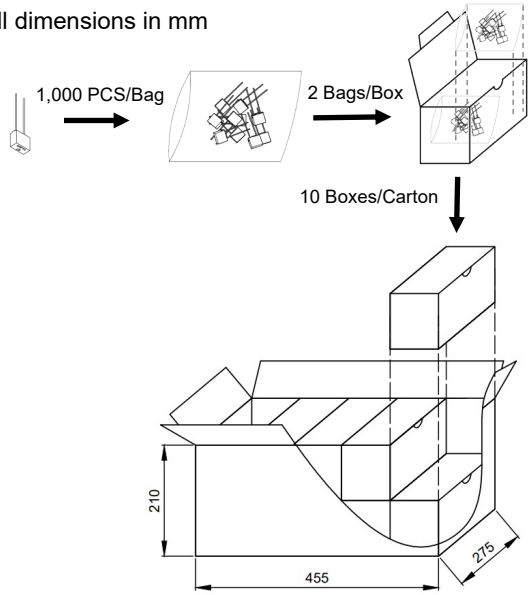

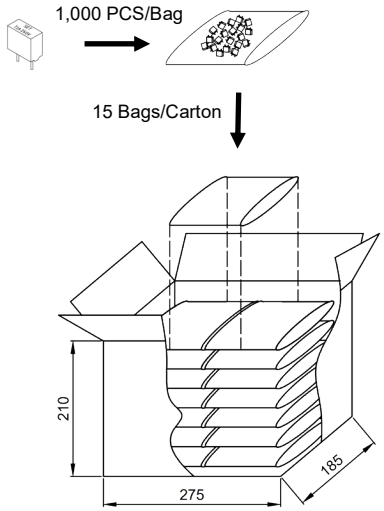

Long Leads ≥ 18.5 mm (Bulk)			
Item	**PE Bag**	**Box**	**Carton**
Q'ty (PCS)	1,000	2,000	20,000
Gross Weight (kg)		7.6 ± 10%	

Short Leads ≤ 6.0 mm (Bulk)		
Item	**PE Bag**	**Carton**
Q'ty (PCS)	1,000	15,000
Gross Weight (kg)		4.6 ± 10%

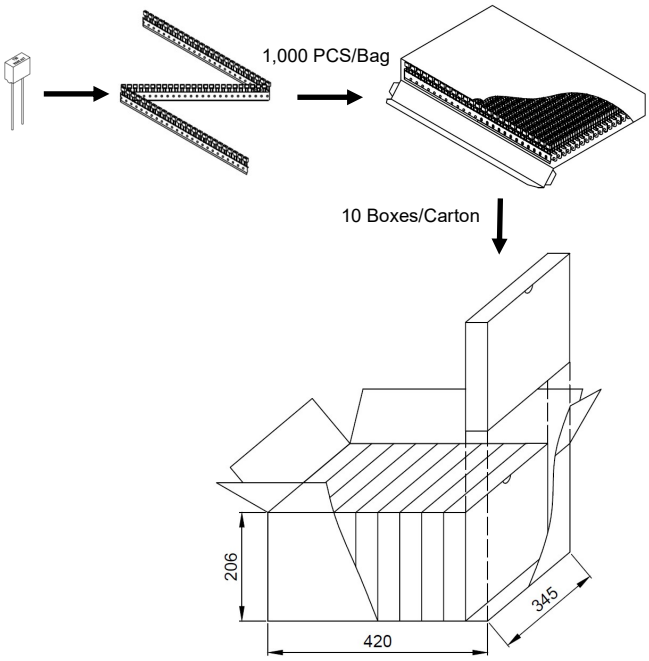

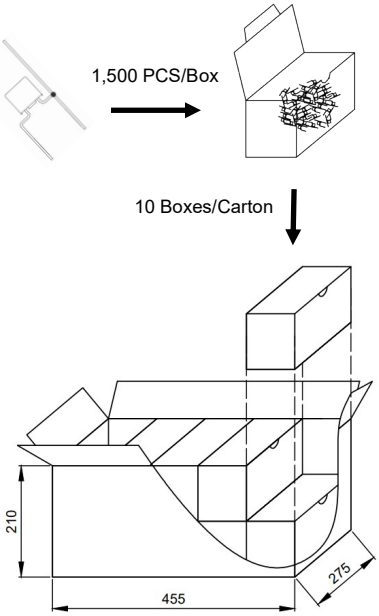

Taping Type		
Item	**Box**	**Carton**
Q'ty (PCS)	1,000	10,000
Gross Weight (kg)		6.0 ± 10%

Three Leads Type (Bulk)		
Item	**Box**	**Carton**
Q'ty (PCS)	1,500	15,000
Gross Weight (kg)		7.8 ± 10%

All Rights Reserved by Xiamen SET Electronics Co., Ltd. 2024-2026 V1.2

Miniature Fuses

Sub-miniature Fuse-links (SFL)

SPT478 Series, Time-Lag, Plastic Case

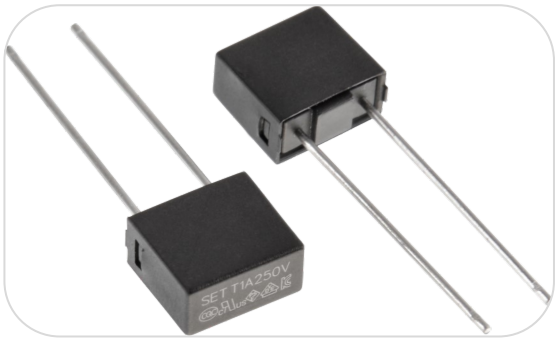

Dimensions (mm)

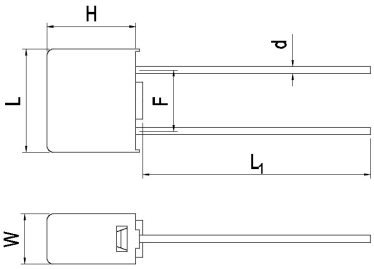

L	L_1	W
8.4 ± 0.5	18.5 ± 1.0	4.1 ± 0.3

H	d	F
7.35 ± 0.50	0.60 ± 0.05	5.08 ± 0.20

Description

Sub-miniature fuse, Time-Lag, Plastic Case, designed to IEC, GB/T and UL standards.

Features

- Miniature Size
- Time-Lag
- Withstand Surge Current
- Designed to IEC 60127-3 Sheet 4 / GB/T 9364.3 Sheet 4 / UL 248-14 / IEC 60127-7 / GB/T 9364.7
- Lead-free (Pb-free)
- RoHS and REACH Compliant

Applications

- Power Supply
- Household Appliance
- General Lighting
- Smart Home
- Office Equipment
- Electric Tool
- Medical Equipment
- SPD

Agency Approvals

Agency Symbol	The file No. and certification No. obtained by SETsafe|SETfuse	Ampere Range
c UL us	E345932	0.1 A ~ 10 A
VDE	40049409	0.1 A ~ 10 A
PSE	PSE25023334 PSE25023335	1 A ~ 5 A 6.3 A ~ 10 A
CCC	2020980207000070	0.1 A ~ 10 A
KC	SU05023-18002 SU05023-18005 SU05023-18001 SU05023-18003 SU05023-18004	0.1 A 0.125 A ~ 0.8 A 1 A ~ 2.5 A 3.15 A ~ 6.3 A 8 A ~ 10 A
IECEE	IEC 60127-3 IEC 60127-7	0.1 A ~ 10 A 12.5 A ~ 20 A

Part Numbering System

SPT478 T1.25A250VT-001

- **Other Options**
- **Packaging**
  T: Taping
  B: Bulk
- **Rated Voltage**
- **Rated Current**
- **Pre-Arcing Time/Current Characteristic**
  T: Time-Lag
- **Product Series**

Structure Diagram

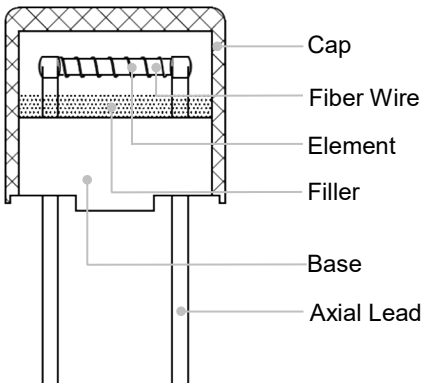

Time/Current Characteristic

% of Ampere Rating	Ampere Rating	Opening Time
210%	0.1 A ~ 6.3 A	2 minutes, Max.
	8 A ~ 20 A	5 minutes, Max.
275%	0.1 A ~ 6.3 A	0.4 s ~ 10 s
	8 A ~ 20 A	1 s ~ 20 s
400%	0.1 A ~ 20 A	0.15 s ~ 3 s
1000%	0.1 A ~ 20 A	0.02 s ~ 0.15 s

All Rights Reserved by Xiamen SET Electronics Co., Ltd. 2024-2026 V1.2

Specifications

Model	Rated Current	Max. Voltage Drop [a]	Max. Sustained Power Dissipation at 1.5 I_N	Typical Melting I^2t [b]	Agency Approvals						Environmental	
					CCC	VDE	KC	PSE	cURus	TUV	RoHS	REACH
	(A)	(mV)	(mW)	(A²Sec)								
SPT478T100mA	0.1	350	170	0.04	●	●	●	○	●	●	●	●
SPT478T125mA	0.125	300	180	0.07	●	●	●	○	●	●	●	●
SPT478T160mA	0.16	280	190	0.11	●	●	●	○	●	●	●	●
SPT478T200mA	0.2	260	200	0.16	●	●	●	○	●	●	●	●
SPT478T250mA	0.25	240	220	0.29	●	●	●	○	●	●	●	●
SPT478T315mA	0.315	220	250	0.50	●	●	●	○	●	●	●	●
SPT478T400mA	0.4	200	280	0.91	●	●	●	○	●	●	●	●
SPT478T500mA	0.5	190	310	1.5	●	●	●	○	●	●	●	●
SPT478T630mA	0.63	180	360	2.4	●	●	●	○	●	●	●	●
SPT478T800mA	0.8	160	430	3.8	●	●	●	○	●	●	●	●
SPT478T1A	1	140	500	9.0	●	●	●	●	●	●	●	●
SPT478T1.25A	1.25	130	600	13	●	●	●	●	●	●	●	●
SPT478T1.6A	1.6	120	730	18	●	●	●	●	●	●	●	●
SPT478T2A	2	100	870	35	●	●	●	●	●	●	●	●
SPT478T2.5A	2.5	100	1000	49	●	●	●	●	●	●	●	●
SPT478T3.15A	3.15	100	1200	66	●	●	●	●	●	●	●	●
SPT478T4A	4	100	1400	112	●	●	●	●	●	●	●	●
SPT478T5A	5	100	1500	165	●	●	●	●	●	●	●	●
SPT478T6.3A	6.3	100	1650	250	●	●	●	●	●	●	●	●
SPT478T8A	8	80	1800	420	●	●	●	●	●	●	●	●
SPT478T10A	10	75	2000	750	●	●	●	●	●	●	●	●
SPT478T12.5A	12.5	180	4000	1060	○	○	○	○	○	●	●	●
SPT478T15A	15	140	4000	1440	○	○	○	○	○	●	●	●
SPT478T16A	16	140	4000	1480	○	○	○	○	○	●	●	●
SPT478T20A	20	100	4000	2600	○	○	○	○	○	●	●	●

Remark: a: Max. Voltage Drop (voltage drop is measured at (23 ± 1) °C ambient temp. at rated current).

b: I^2t value is measured at 10 I_N. ○: Pending. RoHS and REACH Compliant. Breaking Capacity:

CCC / VDE / PSE / KC: 35 A @ 250 VAC or 10 I_N @ 250 VAC whichever is greater

UL / cUL: 150 A @ 125 VAC / 250 VAC / 300 VAC / 350 VAC / 400 VAC

TUV: 35 A @ 250 VAC / 300 VAC or 10 I_N @ 250 VAC / 300 VAC whichever is greater .

All Rights Reserved by Xiamen SET Electronics Co., Ltd. 2024-2026 V1.2

Time Current Curve (For Reference Only)

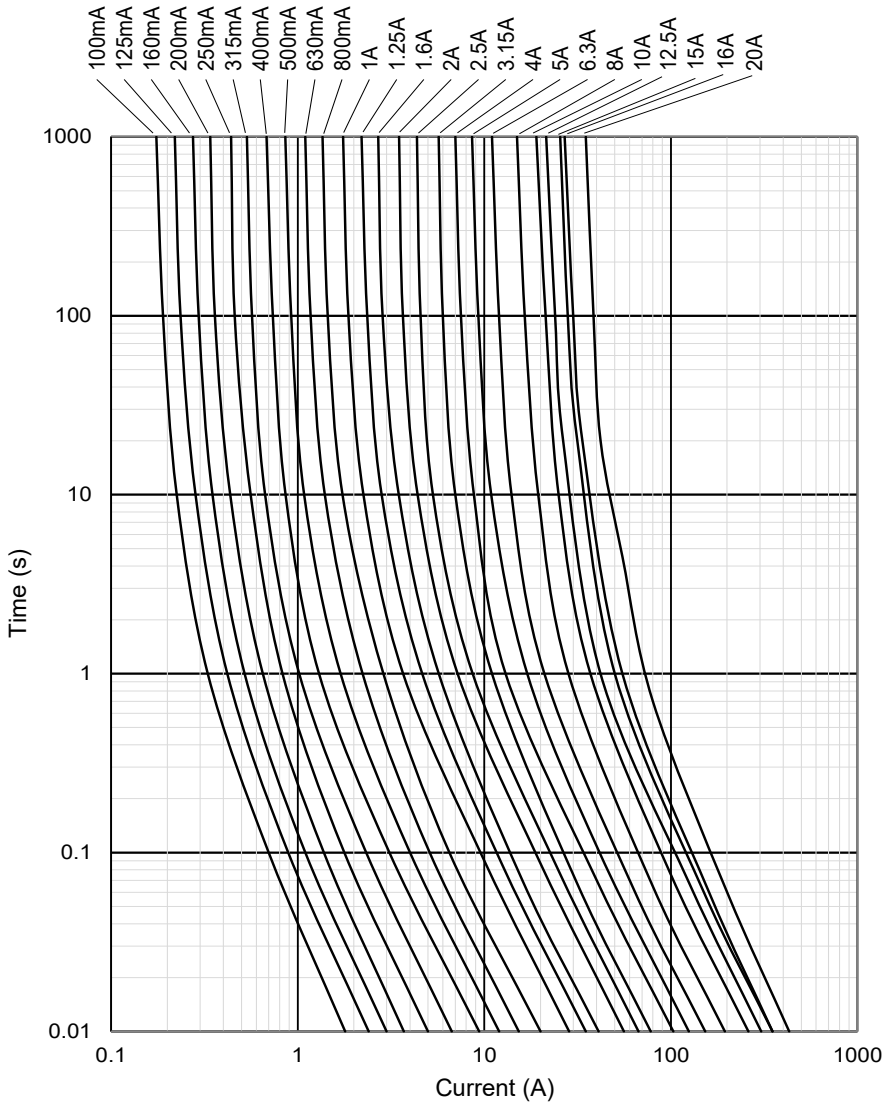

Rated Current Derating Curve（For Reference Only）

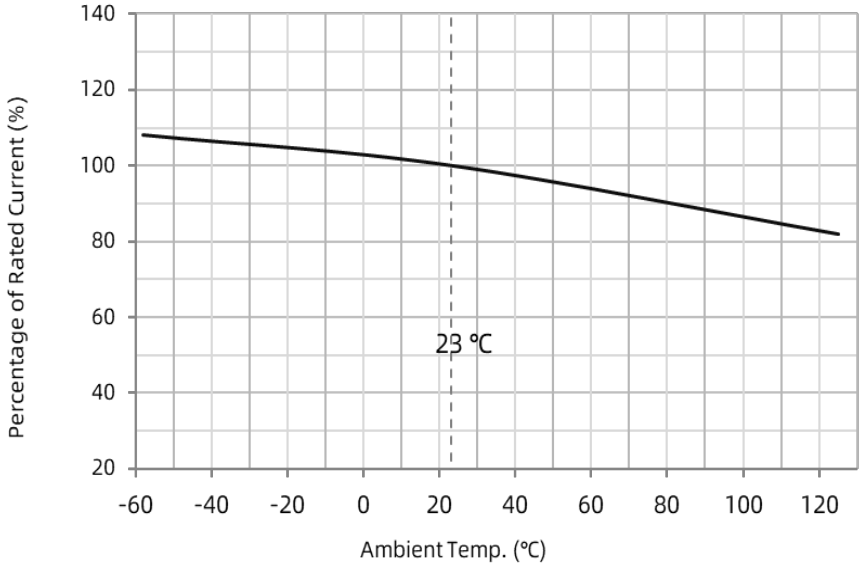

All Rights Reserved by Xiamen SET Electronics Co., Ltd. 2024-2026 V1.2

Packaging Information

All dimensions in mm

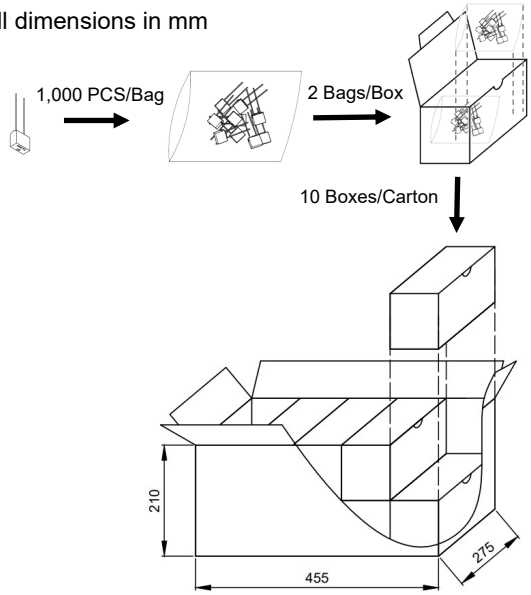

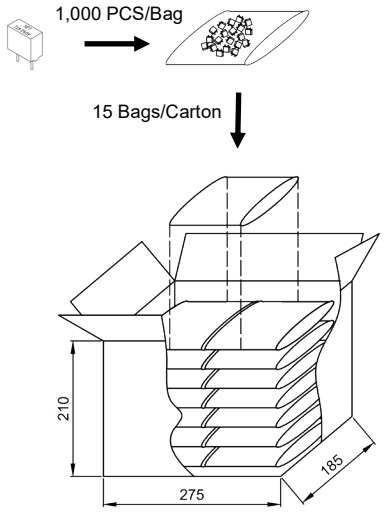

Long Leads ≥ 18.5 mm (Bulk)			
Item	**PE Bag**	**Box**	**Carton**
Q'ty (PCS)	1,000	2,000	20,000
Gross Weight (kg)		7.6 ± 10%	

Short Leads ≤ 6.0 mm (Bulk)		
Item	**PE Bag**	**Carton**
Q'ty (PCS)	1,000	15,000
Gross Weight (kg)		4.6 ± 10%

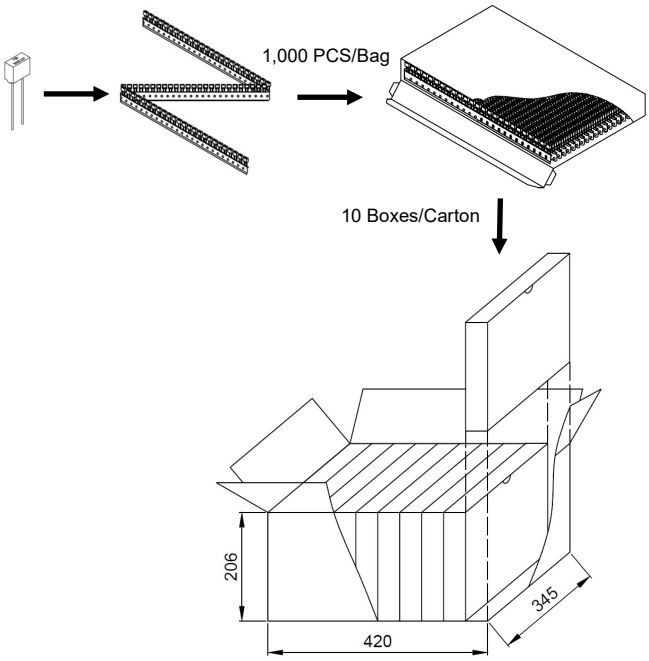

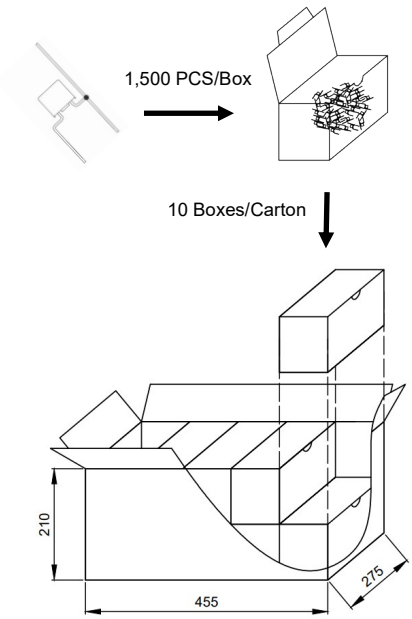

Taping Type		
Item	**Box**	**Carton**
Q'ty (PCS)	1,000	10,000
Gross Weight (kg)		6.0 ± 10%

Three Leads Type (Bulk)		
Item	**Box**	**Carton**
Q'ty (PCS)	1,500	15,000
Gross Weight (kg)		7.8 ± 10%

All Rights Reserved by Xiamen SET Electronics Co., Ltd. 2024-2026 V1.2